CARNIVAL

Gremlin/SEGA

Owner's Manual

Manual Part No.
420-0498

MANUFACTURED BY
Gremlin/SEGA

CARNIVAL
Operating Instructions
and
Service Manual

Copyright • 1980 by GREMLIN/SEGA INDUSTRIES, INC. All rights reserved.

INTRODUCTION...

This is an electronic game that makes extensive use of digital integrated circuitry and television monitor circuitry. This manual assumes the maintenance technician possesses a general knowledge of solid state circuitry microprocessor, TTL digital integrated circuitry and T.V. monitor concepts. Any individual **not** knowledgeable in these areas **should not** attempt repair of the electronic portion of this game. **It should be noted that any attempt to repair the game in the field without the express consent of the factory will immediately void the warranty!!!**

IMPORTANT NOTES...

An important service note is posted in this game and is repeated here for emphasis:

> **If at any time the T.V. screen shows a meaningless display or the game otherwise malfunctions, simply drop a coin into the coin mechanism. This should correct the problem. If not, the game requires service.**

The circuitry in this game has been arranged so that the insertion of a quarter through the coin mechanism will reset the restart in the system. This clears up temporary problems caused by power line disturbances, static, etc.

SERVICE TECHNICIAN NOTE:

The system reset circuitry described above requires that the coin counter is attached to the system. If there is a coin counter problem and no replacement is available, the game will function properly if a 10K Ohm resistor is connected across the coin counter input pins to the video logic board.

ALSO...

Never replace any components with anything other than exact replacement parts. (See Parts List located on Service Schematics.)

Never remove circuit boards/connections while power is on.

Do Not replace the fuse with anything other than the proper value. A blown fuse indicates an overload condition within the game. Replacing the fuse with a higher value can cause severe damage to internal components if an overload occurs.

Always consult the manual before attempting repairs.

Correspondence regarding this game should be addressed to:

GREMLIN INDUSTRIES, INC.
8401 Aero Drive
San Diego, California 92123
(714) 277-8700

REPACKAGING INSTRUCTIONS...

Arcade
25½" W x 67" H x 28" D
64.77cm W x 170.18cm H x 71.12cm D
290 lbs./132 kg.

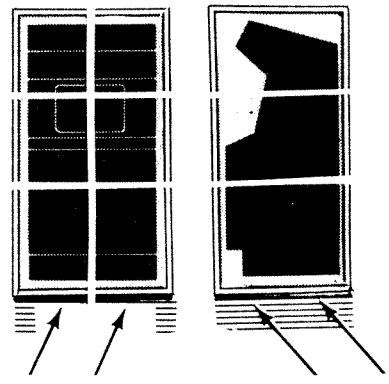

Arcade Version

1. Carefully lay game on its side.
2. Attach pallet with **four** 5/16" - 18 x 1-3/4" bolts, as shown.
3. See Final Recrating Instructions, below.

MiniVideo
22" H x 21" W x 20" D
55.88cm H x 53.34cm W x 50.8cm D
80 lbs./36 kg.

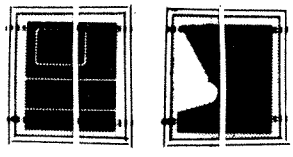

Mini-Video Version

1. Place game upright inside bottom cover.
2. Slide cover over game. Add protective packing material.
3. Place top cover over side cover.
4. See Final Recrating Instructions, below.

Cocktail
22" W x 34" L x 24½" H
55.88cm W x 93.98cm L x 62.23cm H
80 lb./36 kg.

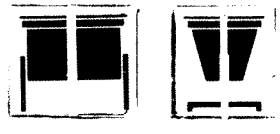

Cocktail Version

1. Place game inside carton.
2. Add protective packing material.
3. Place inside protective top cover over unit.
4. Close flaps and secure with shipping tape.
5. See Final Recrating Instructions, below.

FINAL RECRATING INSTRUCTIONS...

Place game upright. Tape down game keys. Then, crate the game using appropriate shock-absorbent packing material. Include packing on edges of game. **Secure package with strapping.**

Note . . . If the game is to be shipped to Gremlin Industries for service or repair, attach a tag identifying the distributor and indicate the service or repair to be done. Include the full serial number of the game.

All items must be shipped prepaid.

GAME CONCEPT...

CARNIVAL is a 1 or 2 player alternate action game that simulates a carnival shooting gallery. The playfield consists of three target rows, a rotating pipe wheel, a bonus message panel, and a "special" target block.

The player uses a left-right control to position a rifle at the bottom of the screen, and a shoot control to fire the rifle. Two rows of bullets at the bottom of the screen indicate the number of shots remaining to the player. Every time the player shoots, one of the bullets disappears from the screen. More bullets are given during the first round than the others, so, the inexperienced player will have a chance to enjoy the play.

The game ends when the player runs out of bullets. This can occur on any round. A round ends when the player clears the playfield of all targets. At this point, a special "shoot the bear" sequence appears, and when this is finished the player proceeds to the next more difficult (and higher scoring) round. This is Gremlin's Multi-Phase design concept that keeps games challenging to players of all levels.

When a player completes a round (ending with "shoot the bear" sequence), the screen flips to the other player. When the original player resumes play, he advances to the next level of difficulty, exactly as he would have if the screen had not flipped to the other player. This method allows the players to more directly compare their scores, since they are always within one round of each other. Note that the player who ends the game first does not necessarily lose--he might still have the higher score when the game ends.

The three target rows move in a horizontal line from left to right (top row), right to left (middle row) and left to right (bottom row). There are five types of targets. The rows move as a continuous band--the targets exiting the playfield from the right side of the bottom row reappear at the left of the top row. The point value for hitting a row target is indicated along the right side of the game--maximum points for a top row target, medium points for a middle row target, minimum points for a bottom row target. These values increase from round to round.

Rabbits and owls are simple targets, which disappear when hit.

Numbered sign targets award additional bullets to the player when hit, as well as awarding the points indicated for the row. These targets appear only on the top two rows to make them relatively difficult targets.

Five small letters, B, O, N, U and S are randomly interspersed through the target rows. At the upper right of the playfield is the word "bonus" spelled out is small letters. If the player manages to hit the moving bonus letters <u>in order</u> (b-o-n-u-s) a special bonus is awarded. The fact that the bonus is still active is shown by the bonus word in the upper right of the playfield. Every time a bonus letter in the correct order is hit, the small corresponding letter in the bonus panel enlarges to show that it has been hit. Whenever a bonus letter is hit out of order, the bonus panel disappears until the next round. The bonus panel reappears at the beginning of every round. The bonus value is determined by adding row target points into the bonus value. When the "B" letter is hit, the bonus value freezes for that round. This encourages waiting as long as possible before attempting to score the bonus.

Ducks are special targets. Whenever a duck reaches the bottom row, it is capable of leaving the row and flying down toward the player. If the duck manages to get past the player's rifle without being shot, it flies down to the bullet row and quickly eats 10 bullets. A maximum of

three ducks can escape simultaneously.

The target rows move as a continuous band of targets, and no new owls, rabbits, or bonus letter targets are added once the round starts. "More shots" targets and ducks are added during a round. The frequency of adding duck targets is tied to the round number. As the rounds get more difficult, more ducks are added as the round progresses.

A flying duck hit scores no points.

Bullets left over at the end of a round earn 50 points each.

The between rounds "shoot the bear" sequence operates as a shooting gallery bear. Whenever the bear is hit, it rears up, roars, and continues motion in the opposite direction. Each hit speeds up the bear, and increases the point value, which is shown above the bear for each hit. When the bear leaves the screen (which it will always do eventually, since it speeds up with each hit) the between rounds sequence ends and a new round begins. As the rounds progress, more bears (a maximum of 4) appear on the screen simultaneously.

A special yellow-rimmed score panel appears in the upper left of the playfield, and stays on for random lengths of time. Four types of panels appear here, which either add or subtract points or bullets. Hitting any part of the panel border awards the score shown inside.

The bullet bonus panel is shown with a large plus sign, and a row of bullets. Immediately after appearing, the bullets begin diasappearing fairly rapidly. When the bullets are depleted, the panel disappears. If hit, the player is awarded the number of bullets left in the panel when it was hit.

The score bonus is shown with the same large plus sign, and a score value. As with the bullets, the score value quickly decreases, until it hits zero and disappears.

The minus panels are similar to those above except a large minus sign indicates the number of bullets or points subtracted when hit. This discourages the practice of parking on the left margin and shooting--a miss will hit the negative target. These panels show a fixed number of bullets or points, and after a random time interval, disappear.

The pipe wheel contains eight pipes of four different colors. A panel beneath the wheel restricts pipe hits to horizontally oriented pipes, and also indicates the point value for hitting a pipe. Every shot the player takes decrements the pipe value, except a shot which hits a pipe. This makes it advisable to hit pipes early in the round, when it is most difficult (since the player must shoot through heavily populated target rows). Hitting two pipes of the same color with two consecutive shots awards a bonus of four times the pipe value shown in the panel.

CARNIVAL is accompanied by background music. At the beginning of every round, the music begins at a slow rate and relatively low key. As the round progresses, the music speeds up and the melody shifts up in key. This gives the player a growing sense of urgency. As the round progresses, the playfield motion also gradually speeds up.

A small panel on the right of the playfield contains a musical note symbol.. If the player wishes to turn off the music, he simply shoots the note panel. This makes the note disappear, and turns off the music. Hitting the panel again makes the note reappear and resumes the music. The note thus acts as a "flip-flop" switch to turn the music on and off. Every round begins with the music on.

There is a special case to consider near the end of a round: the player has cleared all of the targets except the ducks, and has plenty of bullets

left so that he can simply sit and wait for the ducks. He would, in effect, prolong the game by refusing to end the round.

Theoretically, by hitting the ducks and "more shots" signs, the round could be prolonged indefinitely. However, an internal "doomsday" timer in the game keeps track of how long a round has lasted. After a certain time limit (the same for each round), the frequency of new duck appearances increases dramatically.

CARNIVAL contains the following sounds:

- A clang sound every time a row target or bear is hit;
- A pipe hit sound whenever a pipe is hit;
- A bear roar whenever the bear is hit and rears up;
- Three different duck quack sounds, to accompany up to three simultaneously escaped ducks;
- A bonus sound for lighting the BONUS letters in the correct order;
- A secondary bonus sound for pipe bonus and special panel bonus;
- A rank sound as the player's score moves up in rank;
- Background music;
- Rifle shot.

The top three scores are shown during advertising, along with the player's initials. A player who scores in the top three is allowed to enter three initials by a special routine explained at the time of their writing. The rank is updated during the round. The player is both audibly and visually rewarded. There is a pronounced audible sound as the player's score passes that of another ranking player's score. And, they may watch their rank progress during the game.

CARNIVAL's basic play action is outlined below, as it appears in the game instructions.

- Shoot all targets and pipes to advance to the next round.
- Game is over when you run out of bullets.
- Escaped ducks eat 10 bullets.
- Hit B-O-N-U-S letters in sequence for special bonus.
- Bonus value stops increasing when "B" is hit.
- Hit same color pipes with 2 consecutive shots to score 4 times pipe value.
- Shoot number signs for more bullets.
- Shoot the bear between rounds for extra points.

ADJUSTMENTS: Switch inside coin door turns on/off pipe hit sound during advertising sequence.

NEW GAME BOARDS AND NEW EPROMS...

The following chart shows the two kinds of logic boards Gremlin will use in future games. These will be either a SINGLE VIC board or a DUAL VIC board. Also shown are the possible combinations of Eprom types that Gremlin will be using. The 2 Eprom types are:

1) 2708 (holds 8K of memory)
2) 2716 (holds 16K of memory).

Obviously, the 2716 holds twice as much information as the 2708, **but the 2 Eproms are not directly compatible**—in other words, you have to replace a 2716 with another 2716, and a 2708 with another 2708. In addition, the 2716 Eprom socket is modified slightly to accept the 2716 Eprom. If it is ever necessary to replace a new Eprom, be sure to specify **2708** or **2716** . These numbers are printed on the Eprom package.

Logic Board Type	Possible Eprom Types Used	Where Used
SINGLE VIC board (see photo)	1) All 2708's	HEAD-ON 1 HEAD-ON 2 Future games
	2) 2708's and one 2716 (used in combination)	INVINCO DEEP SCAN Future games

The two Eprom types are used since some game programs require a larger memory than that provided with a set of 2708's. Usually, one 2716 provides enough additional memory space to hold a longer program.

POWER SUPPLY MODIFICATIONS...

For VIC Logic Boards Only

In order to supply – 5 volts to the VIC logic board, it was necessary to modify the game power supply. The modification simply adds a 7905 – 5 volt regulator (Gremlin part #313-0023) to the power supply chassis; the 7905 is connected into the – 12 volt line at pin 11 of the power supply output connector. **PIN 17 OF THIS CONNECTOR NOW BECOMES THE – 5 VOLT OUTPUT.** The other pins remain the same:

pin 11 = – 12v
pin 12 = + 12v
pin 13 = 2-3 V AC signal
pins 14, 15, 16 = GROUND
pin 17 = – 5v
pins 18, 19, 20 = + 5v

Also, a 8900 ufd filter capacitor has been added to the power supply to provide better + 12 volt regulation.

TRANSFORMER VOLTAGE CONVERSION INSTRUCTIONS...

To convert the game transformer to 100, 115, or 230 VAC, refer to the following chart:

*For 100 volts: Connect the voltage INPUT lines to transformer terminals 1 and 2.

*For 115 volts: Connect the voltage INPUT lines to transformer terminals 1 and 3.

*For 230 volts: Connect the voltage INPUT lines to transformer terminals 1 and 4. The fluorescent lamp line must be connected to transformer terminal 3.

ALSO, THE TV MONITOR MUST BE CONVERTED TO THE SAME VOLTAGE INPUT AS THE GAME TRANSFORMER. REFER TO THE MONITOR MANUAL IN THE GAME.

MAINTENANCE PROCEDURES . . DUAL games

I. Power Supply (Refer to drawing #815-0020, sheet 4)

1. Remove output connectors from power supply.
2. Make these initial tests: (GND to BLACK lead on C18, 9000 ufd capacitor)
   a. +9 VDC on POSITIVE terminal of C18
   b. +17-19 V on C6 (4700 ufd cap.)
   c. -17-19 V on C5 (4700 ufd cap.)
   d. -12 V at output pin 11 (adjustable by trim pot R42)
   e. +12 V at output pin 12 (adjustable by trim pot R8)
   f. +5 V at output pins 18,19,20 (adjustable by trim pot R9)
   g. GND (ground, 0 V) at pins 14,15,16
   h. 2-3 V AC at pin 13 (Don't forget to change meter scale to AC)
   i. -5 V at pin 17
3. Check these voltages again with the logic board connected. If any are wrong, a loading condition exists in the logic board, most likely.

II. Logic Board

The following instructions will help you trace down and find most problems associated with the logic board. The procedures are listed by the more common kinds of problems that could arise. Read through all the steps first, then apply them one at a time. The necessary equipment are an oscilloscope and AC/DC voltmeter.

1. NO PICTURE: TV TUBE AND FLUORESCENT LAMP ARE OFF
   a. Plug the game in and check to see that it is receiving 115 (230) VAC. Measure 115 VAC at the input terminals of the game transformer. If it is not present here, proceed to next step.
   b. Check the fuse; if it is good, proceed to next step.
   c. Remove the cover of the junction box in back of the game. Measure 115 VAC on the output of the line filter. If it is not present, the line filter may be bad. Or, one of the AC line connections in the junction box may be loose. UNPLUG the game and re-check these connections.
   d. If the fluorescent lamp still does not operate, turn off game and on again. This usually re-starts the lamp. If it doesn't, turn the lamp in its socket; this will re-seat it for a better connection. Sometimes the lamp works loose during shipment.
   e. An ON/OFF switch for the TV monitor is located on the TV chassis, below the neck of the picture tube. Make sure it is ON.
2. NO PICTURE: TV TUBE AND FLUORESCENT LAMP ARE ON. SCREEN BLACK.
   a. First, make a quick check of the monitor-to-logic board connections: Are all wires making contact with the pin connector? Are the wires secure on the monitor plug-in connector?

b. Check to be sure U14 is seated in its socket properly, and that no pins are bent. This IC is a Prom that develops the necessary video timing sequences. Usually if one pin on the chip is out of the circuit, the screen will appear black. Proceed to next step if this chip is seated correctly.

c. Inspect the high-voltage lead coming off the monitor's high-voltage transformer. This lead attaches directly to the TV tube. Sometimes, during shipment, this wire is jostled out of contact with the transformer. Turn off the game, and carefully push the wire down, toward the transformer, to re-seat it. Now check to see if the picture comes on. If it doesn't, proceed to step d.

d. Using a voltmeter, measure the three voltages powering the logic board. These voltages, +5,-5, +12 volts can easily be measured at the power supply-to-logic board connection. If all the voltages are present, go to next step.

e. Using an oscilloscope, test for clock signals at the following points: (For the moment, don't worry about what each signal should look like: We're concerned with finding floating signals, and/or signals that are not present when they should be, and why they are not.)The scope setting is .2v/div. @ 5usec., with a 10:1 probe. All clock signals, except the video signal, are about 5 volts in amplitude.

* Check pin 6 of U50. Look for a 1½-2 volt video signal. If not there, check pin 4 of U50. If it is here, U50 is probably bad.
* If the signal is not at pin 4 of U50, suspect U57 and U67.
* Check the following IC's and pins for any floating or missing signals: U13, pin 8. U22, pin 9. U15, pins 11,12,13,14. U14, pins 1-7, 9. U19, pins 2,6,10,15. U20, pins 2,7,10,14,15. These chips make up the video timing circuit. Make sure there are no floating or missing signals on any of these chips. If there are, suspect the chip is bad.

3. PICTURE APPEARS: COLOR IS DISTORTED; SOME COLORS MISSING

a. Check the red, blue, and green output signals on U67, pins 4,7,9, respectively. If no signals present, suspect U67, U49, or U66.

4. INCOMPLETE PICTURE: RANDOM DISPLAY

a. Sometimes the game appears on the screen with parts of the picture showing incorrect information. For example, the "HI SCORE" listings display jumbled information, while the rest of the picture is normal. The most likely cause of this problem is one of the 8 Ram IC's U69 through U76. The quickest way to find the bad Ram is simply to replace each IC, one at a time, with knowngood Rams. Be sure not to bend any pins when replacing the IC's. Also, don't overlook the possibility that one of the Ram sockets is bad.

5. RANDOM DISPLAY WHEN GAME IS TURNED ON

a. Activate the coin switch a few times to see if this clears the picture. If not, turn the game off, then on again. If the jumbled display still appears, proceed to step b.

b. Check the reset circuit on the logic board. (Refer to the schematic)

When power is first applied to the game, a reset circuit consisting of Q1, Q2, U18 and U35 is triggered on to reset the microprocessor. This reset signal forces the microprocessor to start at the beginning of the game program. If the microprocessor is not reset, it will still operate—it just won't operate on the right program instructions or data, and will continually display a jumbled pattern on the screen. So, begin by checking for a 3-4 VAC signal at pin 3 of the power supply-to-logic board connector. Follow the signal through Q1, where, at the collector, a sawtooth wave appears. Then, when power is first applied, observe pin 2 of U18 as capacitor C10 slowly charges to about 3 volts. When this level is reached, U18 is triggered to change states, causing pin 3 to go high, then low. This change is inverted by U17 and finally reaches pin 26 of the Z80. Check pin 26 of the Z80 for a low-to-high signal change. If not present, one or more of the reset circuit components is bad. If it is present, proceed to step c.

c. The following lists some probable causes of the jumbled display pattern:

* one or more RAMs
* one of the Eproms, U1-8, U26-33
* The microprocessor, U 16, is bad.
* U47 (74LS245) is bad.
* U51 and U52 are bad.
* Check the 3 operating voltages, +5,-5, +12 VDC.

6. GAME DOES NOT COIN UP

a. A common problem with a game that does not coin up is that the coin switch trip wire is out of adjustment. Usually, all that is necessary is to bend the trip wire up or down, depending on whether a heavier or lighter tension is needed.

b. There may be a problem in the coin circuit on the logic board. Check U62, pins 6,8 for pulses each time the coin switch is tripped. Also, U43 and/or U62 may be bad. Suspect U45, also.

c. It is possible that one of the coin counter transistors, Q3 and Q4, is bad. Determine whether or not the counter advances each time the coin switch is tripped.

d. Don't overlook an incorrect or faulty coin switch-to-logic board connection; sometimes these wires work loose from the coin switches.

7. PLAYER CONTROLS NOT WORKING

a. Check first to be sure all control switch connections are secure. This includes checking the black wires, or ground leads.

b. If these connections are good, make sure the control panel leads are intact inside the Molex[tm] connector to the logic board.

c. If the controls still do not work, suspect U44 on the logic board. However, U44 could be good but might not be receiving the activating pulses from U24, pin 10 or U25, pin 12. Check these also.

Recommended Spare Parts . . .

UPRIGHT
dual games

GREMLIN PART NO.	DESCRIPTION	QTY PER 10 GAMES
130-0001	speaker	1
130-0002	speaker cover	1
200-0011	Algol color monitor	1
253-0104	Plexi front monitor panel	1
253-0120	panel logo, HO2/INVINCO	1
253-0121	" " HO2/DEEP SCAN	1
253-0123	" " DEEP SCAN/INVINCO	1
253-0130	" " CAR HUNT/INVINCO	1
253-0133	" " CAR HUNT/DEEP SCAN	1
390-0011	fluorescent lamp	2
220-0008	coin counter	1
220-0035	coin door lock and key	2
220-0066	coin mechanism, complete	2
220-0071	coin reject button & spring	3
220-0072	coin return stop (U-bolt)	3
475-0007	volume control	1
510-0014	slide switch	1
510-0042	coin switch	3
510-0051	push button switch	1
(800-0076)	photo coin assy.	
270-0001	line filter, junction box	1
514-0001	fuse, 2A, slo	5.
240-0007	black pushbutton control	3
510-0023	mounting/contacts for above	3
510-0050	game select switch	3
800-0056	complete joystick	2
240-0091	joystick knob	3
250-0289	threaded rod	3
250-0291	upper sleeve	3
510-0041	joystick switch	5
315-0019	2708 Eprom, blank specify by number on Eprom	1 set
315-0050	2716 Eprom specify by number on Eprom	1 set

316-0246	color prom INV/DS	1
316-0283	color prom HO2/DS	1
316-0287	color prom HO2/INV	1
316-0390	color prom CAR HUNT/DS	1
314-0001	555IC	5
314-0093	74LS374 IC	3
314-0099	74LS245	3
314-0104	74LS138	3
314-0105	74LS253	3
315-0031	Z80 microprocessor	2
315-0039	RAM IC	10
315-0042	Video Interface chip (VIC)	3
316-0206	video timing prom	3
475-0002	resistor pack	3
482-0010	PE8050 transistor	3
482-0014	2N4401 "	10
510-0043	6-position DIP switch	2

The following are suggested parts for all sound boards.

313-0008	LM348 IC	5
314-0042	7406 IC	5
315-0006	CMOS 4017 IC	5
315-0035	MM 5837 IC	5
315-0043	CMOS 4069 IC	5
481-0006	1N914	10
481-0008	1N5231 Zener diode	10
482-0006	2N4403 transistor	10
482-0023	2N4093 "	10
313-0004	LM741 IC	5
315-0005	CMOS 4013 IC	5
315-0009	CMOS 4081 IC	5

Gremlin/SEGA San Diego, California 92123	PARTS LIST	TITLE TOP ASSY CARNIVAL UPRIGHT ENG WHT	700-0022 DWG NO	SH 1 OF 5	A REV
USE WITH 800-3076 FOR PARTS LOCATIONS		DRAWN SON DUONG	ENGR		
		CHECK A. AMBROSE 5-25-80	APPR		

LTR	DATE	REVISION DESCRIPTION	DRAFT	CHECK	APPR
A	5-22-80	RELEASED	SD		
		REFER TO HEXAGON CALL-OUTS ON DRAWINGS FOR THE LOCATION OF PARTS LISTED HERE.			

FORM NO. 001-1500

Gremlin Industries, Inc. San Diego, California 92123	PARTS LIST	TITLE TOP ASSY CARNIVAL UPRIGHT ENG WHT	700-0022 DWG NO	SH 2 OF 5	A REV

ITEM NO	PART NO	QTY PER ASSY	DESCRIPTION	REF DES
1	800-3076	1	ASSY BASIC KIT CARNIVAL	
2	800-3075	1	ASSY DUAL VIC LOGIC CARNIVAL ENG.	
3	140-0048	1	CABINET BASIC WHT	
4	420-0494	1	GRAPHIC, SIDE, RIGHT	
5	420-0493	1	GRAPHIC, SIDE, LEFT	
6	800-0122	1	ASSY, SHIPPING KIT	

Gremlin Industries, Inc. San Diego, California 92123	PARTS LIST	TITLE TOP ASSY CARNIVAL UPRIGHT ENG WOODGRAIN	700-0023 DWG NO	SH 2 OF 2	A REV

ITEM NO	PART NO	QTY PER ASSY	DESCRIPTION	REF DES
1	800-3076	1	ASSY BASIC KIT CARNIVAL	
2	800-3075	1	ASSY DUAL VIC LOGIC CARNIVAL ENG	
3	140-0049	1	CABINET BASIC WOODGRAIN	
4				
5				
6	800-0122	1	ASSY SHIPPING KIT	

Gremlin/SEGA San Diego, California 92123	PARTS LIST	TITLE TOP ASSY CARNIVAL UPRIGHT ENG WOODGRAIN	700-0023 DWG NO	SH 1 OF 2	A REV
USE WITH 800-3076 & 700-0022		DRAWN LIEN VAN HO	ENGR		
		CHECK A. AMBROSE 5-29-80	APPR		

LTR	DATE	REVISION DESCRIPTION	DRAFT	CHECK	APPR
A	6-2-80	RELEASED	L.V.H.	JC	JC
		REFER TO HEXAGON CALL-OUTS ON DRAWINGS			
		FOR THE LOCATION OF PARTS LISTED HERE.			

FORM NO 001-1500

Gremlin/SEGA San Diego, California 92123	PARTS LIST	TITLE ASSY LOGIC CARNIVAL UPRIGHT	800-3075 DWG NO	SH 1 OF 2	A REV
		DRAWN L. Cameron	ENGR		
		CHECK A. AMBROSE 6-2-80	APPR		

LTR	DATE	REVISION DESCRIPTION	DRAFT	CHECK	APPR
A	6-2-80	RELEASED	EC	SC	SC

ORM NO. 001-1500

Gremlin Industries, Inc. San Diego, California 92123	PARTS LIST	TITLE ASSY LOGIC CARNIVAL UPRIGHT	800-3075 DWG NO	SH 2 OF 2	A REV

ITEM NO	PART NO	QTY PER ASSY	DESCRIPTION	REF DES
1	800-0058	1	DUAL GAME VIC 13D	
2	315-0019	15	IC EPROM 2708	U20-34
3	315-0042	1	CUSTOM CHIP	U48
4	316-0633	1	IC CLR PROM 32 X 8	U44
5	316-0206	1	IC PROM PGB	

Gremlin Industries, Inc. San Diego, California 92123	PARTS LIST	TITLE ASSY DUAL GAME V.I.C.	800-0058 DWG NO	SH 1 OF 8	D REV
SHT 5,6,7,8 ARE "D" SIZE		DRAWN [illegible] 9-20-79	ENGR		
		CHECK [illegible]	APPR [illegible]		

LTR	DATE	REVISION DESCRIPTION	DRAFT	CHECK	APPR
A	10-17-79	RELEASED	WJB	[illegible]	[illegible]
B	10-23-79	PER ECN 350 12-3-79	WJB	[illegible]	[illegible]
C	11-26-79	PER ECN 359 12-10-79	WJB	[illegible]	[illegible]
D	1-24-80	PER ECN 368 1-28-80	WJB	[illegible]	[illegible]

FORM NO 001-1500

Gremlin Industries, Inc. San Diego, California 92123	PARTS LIST	TITLE ASSY DUAL GAME V.I.C.	800-0058 DWG NO	SH 2 OF 8	D REV

ITEM NO	PART NO	QTY PER ASSY	DESCRIPTION	REF DES
1	151-0005	1	CAP CER 680 pf 50V	C12
2	151-0011	4	CAP CER .01μf 50V	C73, C74, C41, C42
3	151-0012	64	CAP CER .1μf 50V	C1,2,4,5,7,11,13-40,43-72
4	152-0001	1	CAP FILM .1μf 100V	C75
5	153-0001	3	CAP TANT 10μf 25V	C3, C6, C10
6	153-0002	1	CAP TANT 1μf 25V	C9
7	153-0008	1	CAP TANT 100μf 20V	C8
8	170-0174	1	P C BOARD	
9	211-0004	6	CONN PIN TEST PT	TP1 – TP6
10	212-0004	2	CONN M 4 PIN	
11	212-0021	4	CONN M 10 PIN	
12	212-0031	3	CONN M 12 PIN	
13	213-0001	11	SKT 16 PIN DUAL IN/IN	XU14, 19, 69-76, XSW1
14	213-0005	2	SKT 40 PIN DUAL IN/IN	XU16, XU57
15	213-0007	16	SKT 24 PIN DUAL IN/IN	XU1-XU8, XU26-XU33
16	230-0009	1	XTAL CLK 15.46848 MHz	Y1
17	314-0001	3	IC NE555	U18, U36, U37
18	314-0015	1	IC 7404	U17
19	314-0018	2	IC 74L500	U23, U62
20	314-0019	2	IC 74L504	U25, U68

Gremlin Industries, Inc. San Diego, California 92123	PARTS LIST	TITLE ASSY DUAL GAME V.I.C.	800-0058 DWG NO	SH 3 OF 8	D REV

ITEM NO	PART NO	QTY PER ASSY	DESCRIPTION	REF DES
21	314-0040	4	IC 74LS125	U51,U52,U54,U55
22	314-0046	1	IC 74S04	U13
23	314-0058	5	IC 74LS08	U10-U12, U35,U56
24	314-0059	1	IC 74LS10	U77
25	314-0062	4	IC 74LS74	U22,U43,U58,U65
26	314-0070	1	IC 74LS86	U50
27	314-0072	2	IC 74LS174	U53,U66
28	314-0073	2	IC 74LS175	U19,U20
29	314-0076	1	IC 74LS157	U67
30	314-0078	1	IC 74LS02	U24
31	314-0092	2	IC 8216	U47,U48
32	314-0093	2	IC 74LS374	U63,U64
33	314-0104	2	IC 74LS138	U9,U34
34	314-0105	3	IC 74LS253	U44-U46
35	314-0086	1	IC 74LS163	U15
36	315-0031	1	IC Z80 CPU	U16
37	315-0039	8	IC RAM 4K D C/S PEC 12V	U69-U76
38	315-0042	1	IC VIDEO INTERFACE	U57
39	316-0206	1	IC PROM 32X8 CTL	U14
40	390-0003	1	LED RED	D2

Gremlin Industries, Inc. San Diego, California 92123	PARTS LIST	TITLE ASSY DUAL GAME V.I.C.	800-0058 DWG NO	SH 4 OF 8	D REV

ITEM NO	PART NO	QTY PER ASSY	DESCRIPTION	REF DES
41	471-0101	1	RES 100 OHM 1/2W 5%	R5
42	471-0102	14	RES 1K OHM 1/2W 5%	R11-R1319-24,26-28,39,40
43	471-0103	3	RES 10K OHM 1/2W 5%	R10, R34 R35
44	471-0104	3	RES 100K OHM 1/2W 5%	R1, R2, R7
45	471-0183	2	RES 18K OHM 1/2W 5%	R30, R36
46	471-0220	3	RES 22 OHM 1/2W 5%	R14-R16
47	471-0221	1	RES 220 OHM 1/2W 5%	R33
48	471-0331	7	RES 330 OHM 1/2W 5%	R3,R4,R6,R17,R18,R31,R32
49	471-0471	1	RES 470 OHM 1/2W 5%	R8
50	471-0472	2	RES 4.7K OHM 1/2W 5%	R9, R37
51	475-0001	1	POT 10K CAR PCMTV	R38
52	477-0002	2	RES PACK 15 X 2.2K	RP1, RP2
53	481-0001	1	DIODE IN4002	D4
54	481-0006	2	DIODE IN914/IN4148	D1, D3
55	482-0010	1	XSTR PE 8050	Q3
56	482-0014	4	XSTR 2N4401	Q1, Q2, Q4, Q5
57	510-0043	1	SWITCH 6 POS DIP	SW1
58	152-0007	2	CAP FILM .001μf 250V	C76, C77

Gremlin Industries, Inc. San Diego, California 92123	PARTS LIST	TITLE ASSEMBLY CARNIVAL SOUND	800-3057 DWG NO	SH 1 OF 6	B REV
SHT 5 & 6 ARE "D" SIZE		DRAWN [illegible] 7-16-80	ENGR		
		CHECK [illegible] 5-30-80	APPR		

LTR	DATE	REVISION DESCRIPTION	DRAFT	CHECK	APPR
A	4-29-80	RELEASED	[illegible]JB	RH	RH
B	5-30-80	PER ECN 409 & Ⓐ	[illegible]JE	RH	RH

FORM NO. 001-1500

Gremlin Industries, Inc. San Diego, California 92123	PARTS LIST	TITLE ASSEMBLY CARNIVAL SOUND	800-3057 DWG NO	SH 2 OF 6	B REV

ITEM NO	PART NO	QTY PER ASSY	DESCRIPTION	REF DES
1	150-0004	3	CAP E 10µf 25V	C6, C16, C22
2	151-0001	10	CAP CER .05µf 50V	C13, C18, C27, C28, C30, C33, C37, C51, C53, C54
3	151-0005	1	CAP CER 680pf 50V	C36
4	151-0012	12	CAP CER .1µf 50V	C20, C21, C34, C35, C39, C42 C43, C45, C55, C56, C63, C64
5	151-0019	1	CAP CER 330pf 50V	C3
6	151-0052	2	CAP CER 470pf 1000V	C8, C15
7	152-0001	9	CAP FILM .1µf 100V	C4, C5, C10, C12, C14, C29, C38, C40, C41
8	152-0004	2	CAP FILM .0022µf 50V	C59, C60
9	152-0005	8	CAP FILM .0047µf 50V	C2, C9, C26, C25, C31, C44, C57, C58
10	152-0007	2	CAP FILM .001µf 250V	C19, C52
11	152-0009	2	CAP FILM .0033 µf 25V	C61, C62
12	152-0010	3	CAP FILM .022µf 100V	C24, C49, C50
13	152-0012	1	CAP FILM .047µf 200V	C11
14	152-0018	1	CAP FILM .01µf 250V	C1
15	153-0003	5	CAP TANT 2.2µf 25V	C7, C17, C23, C47, C48
16	153-0007	2	CAP TANT 6.8µf 25V	C32, C46
17	170-0199	1	P C BOARD	

Gremlin Industries, Inc. San Diego, California 92123	PARTS LIST	TITLE ASSEMBLY CARNIVAL SOUND	800-3057 DWG NO	SH 3 OF 6	B REV

ITEM NO	PART NO	QTY PER ASSY	DESCRIPTION	REF DES
18	212-0021	2	CONN 10PIN M PLZD	
19	313-0008	5	IC LM348	U5, U8-U10, U14
20	314-0001	1	IC NE555	U7
21	315-0035	1	IC MM5837	U6
22	315-0043	7	IC CD4069	U1-U4, U11-U13
23	471-0101	6	RES 100 OHM 1/2W 5%	R40, R49, R59, R113, R118, R121
24	471-0102	3	RES 1K OHM 1/2W 5%	R76, R86, R127
25	471-0103	21	RES 10K OHM 1/2W 5%	R11, R33, R35, R53, R54, R69, R77, R82, R83, R85, R102, R103, R105, R106, R109-R111, R128, R129, R134, R142
26	471-0104	24	RES 100K OHM 1/2W 5%	R1, R10, R16, R26, R30, R34, R37, R45, R46, R56, R62, R66, R79, R81, R104, R112, R115, R119, R125, R130, R132, R136, R137, R139
27	471-0105	24	RES 1MEG OHM 1/2W 5%	R3, R4, R8, R20-R22, R25, R28, R32, R39, R48, R58, R61, R71, R73, R80, R94, R95, R100, R123, R126, R143-R145
28	471-0153	1	RES 15K OHM 1/2W 5%	R70
29	471-0154	1	RES 150K OHM 1/2W 5%	R60
30	471-0222	2	RES 2.2K OHM 1/2W 5%	R131, R135
31	471-0223	11	RES 22K OHM 1/2W 5%	R38, R41, R42, R44, R47, R57, R65, R67, R78, R96, R114, R124
32	471-0224	1	RES 220K OHM 1/2W 5%	R98

Gremlin Industries, Inc. San Diego, California 92123	PARTS LIST	TITLE ASSEMBLY CARNIVAL SOUND	800-3057 DWG NO	SH 4 OF 6	B REV

ITEM NO	PART NO	QTY PER ASSY	DESCRIPTION	REF DES
33	471-0225	8	RES 2.2 MEG OHM 1/2W 5%	R2,R5-R7,R14,R15,R18,R29
34	471-0332	1	RES 3.3K OHM 1/2W 5%	R138
35	471-0333	2	RES 33K OHM 1/2W 5%	R91, R140
36	471-0334	4	RES 330K OHM 1/2W 5%	R116,R120,R133,R141
37	471-0395	4	RES 3.9 MEG OHM 1/2W 5%	R9,R19,R23,R24
38				
39	471-0472	1	RES 4.7K OHM 1/2W 5%	R74
40	471-0473	15	RES 47K OHM 1/2W 5%	R13,R27,R36,R43,R50-R52
				R63,R90,R97,R99,R107,R108
				R146, R89
41	471-0474	9	RES 470K OHM 1/2W 5%	R12,R17,R31,R64,R68,R84
				R92, R101, R117
42	471-0512	3	RES 5.1K OHM 1/2W 5%	R75,R87,R93
43	471-0683	1	RES 68K OHM 1/2W 5%	R55
44	471-0754	2	RES 750K OHM 1/2W 5%	R72, R122
45	471-0823	1	RES 82K OHM 1/2W 5%	R88
46	481-0006	34	DIODE IN914/IN4148	D1 - D34
47	481-0008	4	DIODE ZENER IN5231	D35-D38
48	482-0006	3	XSTR 2N4403	Q13-Q15
49	482-0014	14	XSTR 2N4401	Q1-Q3,Q6-Q12,Q17-Q20
50	482-0023	3	XSTR 2N4093	Q4,Q5,Q16

Gremlin/SEGA San Diego, California 92123	PARTS LIST	TITLE ASSEMBLY COIN MECH DUAL SBA	800-3081 DWG NO	SH 1 OF 4	A REV
SHEET 3 IS "D" SIZE		DRAWN Lien van Ho	ENGR		
		CHECK A. AMEROSE 5-23	APPR		

LTR	DATE	REVISION DESCRIPTION	DRAFT	CHECK	APPR
A	5-23-80	RELEASED	L.H.		

FORM NO. 001-1500

Gremlin Industries, Inc. San Diego, California 92123	PARTS LIST	TITLE ASSEMBLY COIN MECH DUAL SBA	800-3081 DWG NO	SH 2 OF 4	A REV

ITEM NO	PART NO	QTY PER ASSY	DESCRIPTION	REF DES
1	250-0285	1	CASH DOOR MODIFIED	
2	220-0066	1	COIN MECHANISM	
3	220-0035	1	LOCK FORT LOCK IR	
4	370-0002	2	OPTO-ISOLATOR TIL 139	
5	800-0085	1	ASSY. PHOTO CALCULATOR	
6	240-0001	1	KNOB, VOL. CONTROL	
7	250-0068	1	BRACKET	
8	420-0046	1	DECAL, VOL. CONTROL	
9	475-0007	1	POTENTIOMETER 10KΩ CAR. PNLMT.	
10	510-0014	1	SWITCH, SLIDE, SPDT	
11		8	SCREW 8-32x$\frac{1}{2}$" TAMPER-PROOF	
12		2	SCREW, MECH. P.H. PHL 4-40x$\frac{1}{2}$"	
13		4	SCREW, SHT. MTL. P.H. PHL #6	
14		2	SCREW, MECH. P.H. PHL 6-32x$\frac{1}{2}$"	
15		2	WASHER, FLAT #6	
16		2	WASHER, LOCK SPLIT #6	
17		2	WASHER, LOCK #4	
18		8	WASHER, LOCK SPLIT #8	
19		8	NUT HEX 8-32	
20		2	NUT HEX 6-32	
21		2	NUT HEX 4-40	
22		4	ALUMINUM RIVETS $\frac{1}{8}$"	
23	510-0051	1	SWITCH PUSH BUTTON SLIDE	
24	220-0150	1	COIN MECH SBA	
25	800-0076	1	PHOTO COIN CALC	

Gremlin Industries, Inc. San Diego, California 92123	PARTS LIST	TITLE ASSEMBLY COIN MECH DUAL SBA	800-3081 DWG NO	SH 3 OF 4	A REV

ITEM NO	PART NO	QTY PER ASSY	DESCRIPTION	REF DES
26	220-0008	1	COUNTER DIGITAL	

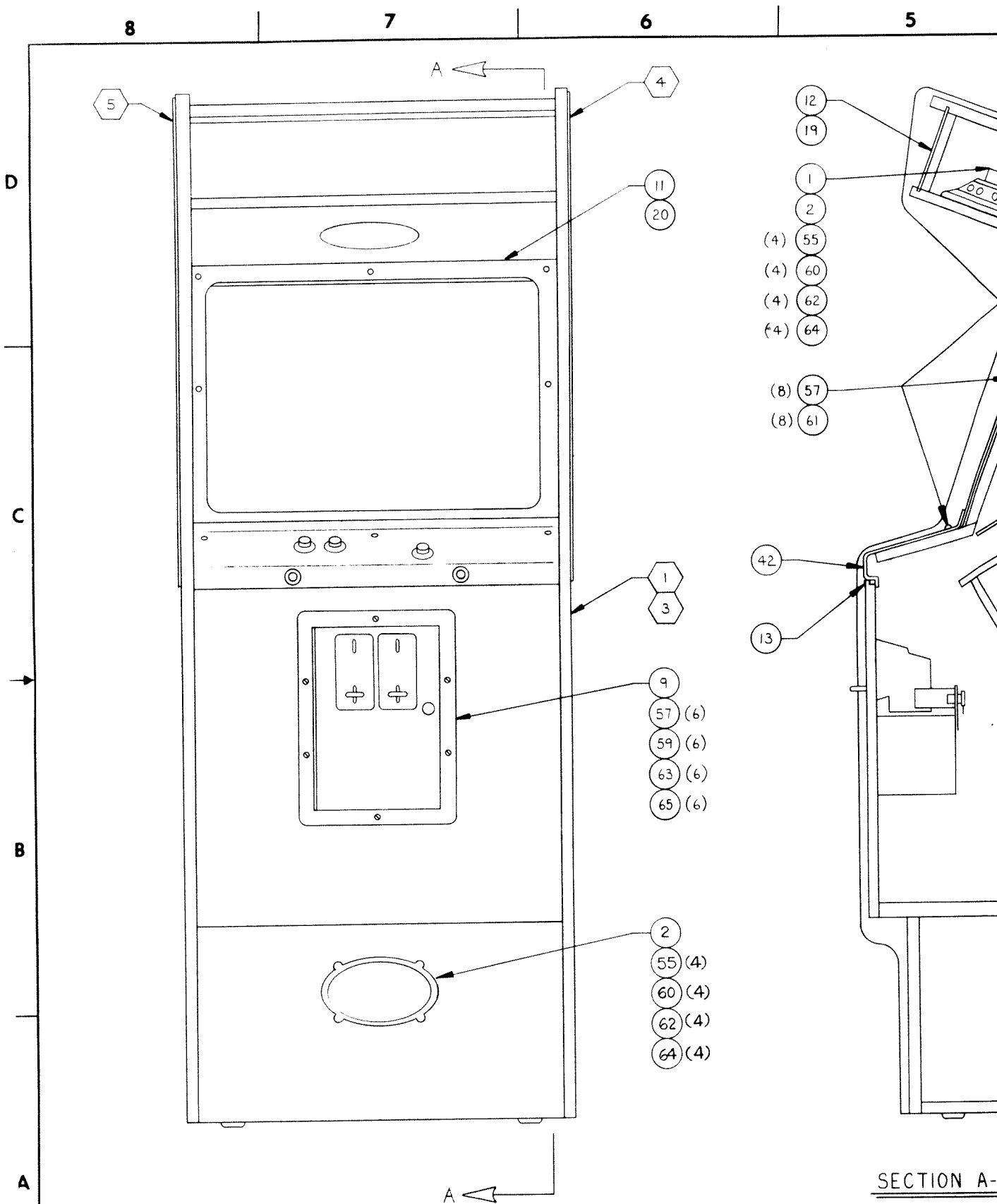
8
7
6
5
D
C
B
A
A
A
5
4
11
20
1
3
9
57 (6)
59 (6)
63 (6)
65 (6)
2
55 (4)
60 (4)
62 (4)
64 (4)
12
19
1
2
(4) 55
(4) 60
(4) 62
(4) 64
(8) 57
(8) 61
42
13
SECTION A-

REVISIONS				
ZONE	LTR	DESCRIPTION	DATE	APPROVED
	A	RELEASED J.M.	6-2-80	

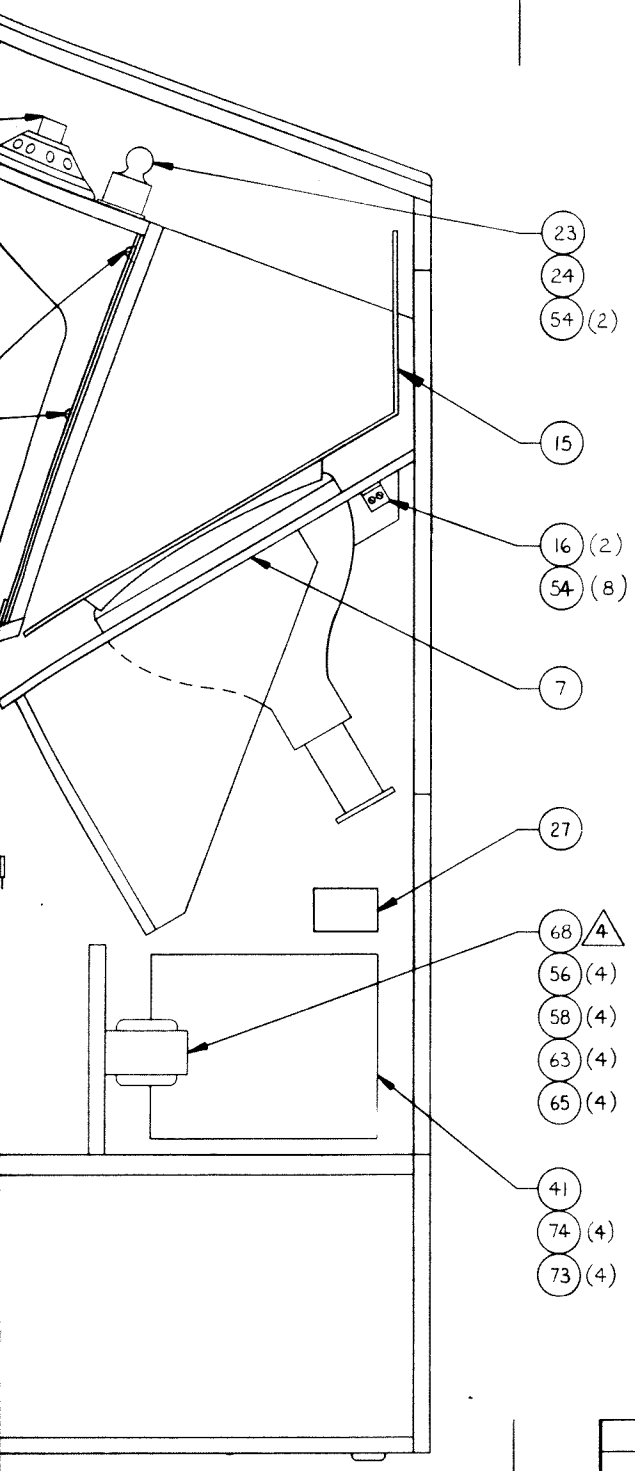

A-A

NOTES :

1. INSTALL WIRE HOLD DOWN CLIPS, ITEM 21, APPROX AS SHOWN ON PRODUCTION MOCK-UP
2. INSTALL CABLE TIES, ITEM 5, AS REQD TO DRESS WIRING
3. INSTALL GROUND STRAP, ITEM 39, AS SHOWN ON PRODUCTION MOCK-UP

4 XFMR TO BE MOUNTED WITH PRIMARY SIDE UP .

QTY REQD	CODE IDENT	PART OR IDENTIFYING NO.	NOMENCLATURE OR DESCRIPTION

PARTS LIST

UNLESS OTHERWISE SPECIFIED DIMENSIONS ARE IN INCHES
TOLERANCES ARE:
FRACTIONS ± DECIMALS .XX ± .XXX ± ANGLES ±

MATERIAL

FINISH

DO NOT SCALE DRAWING

CONTRACT NO.

APPROVALS	DATE
DRAWN MAHONEY	5-23-80
CHECKED A. AMBROSE	5-29-80

NEXT ASSY	USED ON
APPLICATION	

Gremlin Industries, Inc.
San Diego, California 92123

TOP ASSY
CARNIVAL UPRIGHT

SIZE	CODE IDENT NO.	DRAWING NO.	REV
D		700-0022	A

SCALE NONE SHEET 3 OF 5

700-0022 A

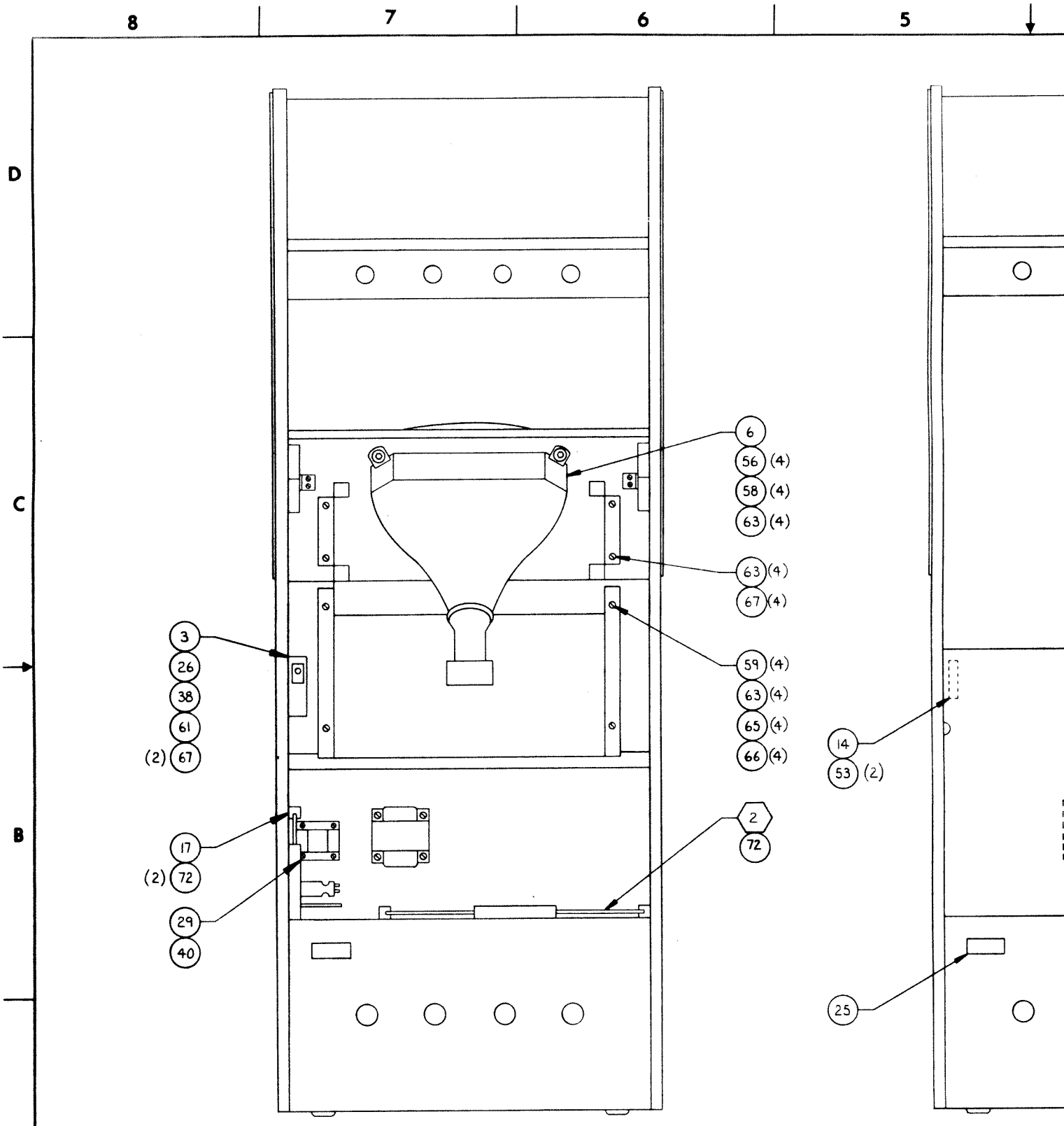

VIEW B-B
(REAR PANEL AND DOOR REMOVED)

REVISIONS				
ZONE	LTR	DESCRIPTION	DATE	APPROVED
	A	RELEASED J.M.	6-2-80	

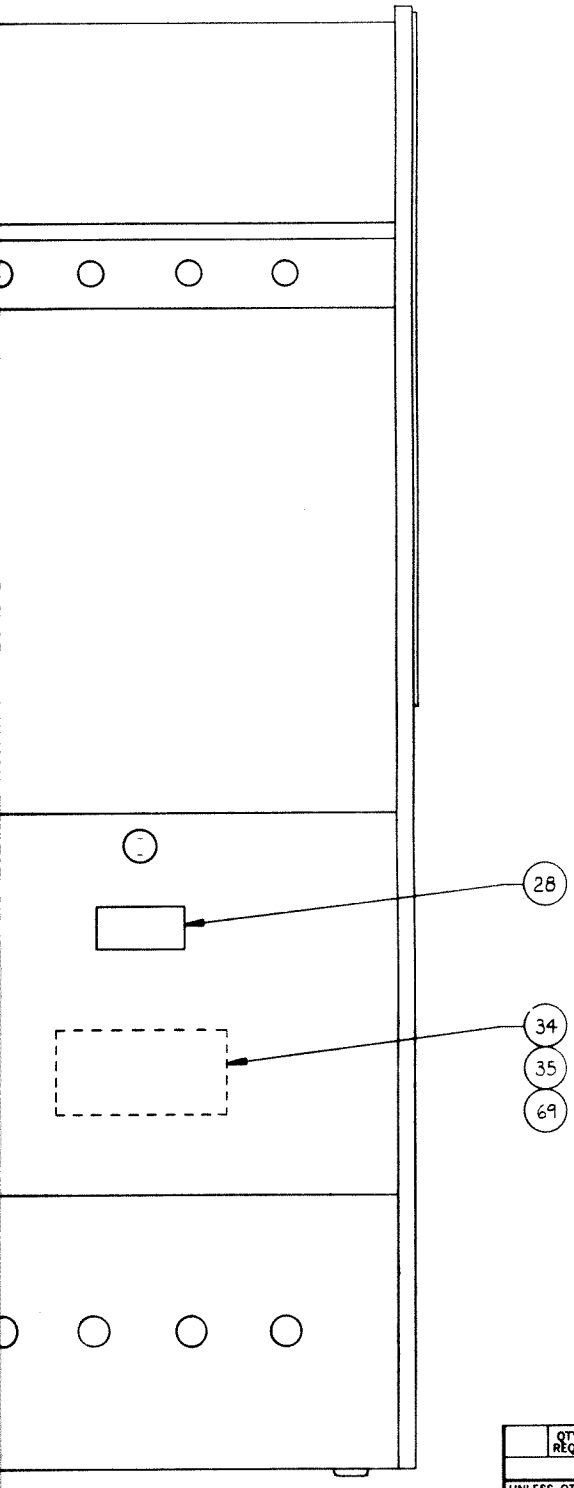

VIEW B-B

QTY REQD	CODE IDENT	PART OR IDENTIFYING NO.	NOMENCLATURE OR DESCRIPTION

PARTS LIST

UNLESS OTHERWISE SPECIFIED DIMENSIONS ARE IN INCHES
TOLERANCES ARE:
FRACTIONS ± DECIMALS .XX ± .XXX ± ANGLES ±

MATERIAL

FINISH

DO NOT SCALE DRAWING

CONTRACT NO.

APPROVALS	DATE
DRAWN MAHONEY	5-23-80
CHECKED A. AMBROSE	5-29-80

NEXT ASSY	USED ON
APPLICATION	

Gremlin Industries, Inc.
San Diego, California 92123

TOP ASSY
CARNIVAL UPRIGHT

SIZE	CODE IDENT NO.	DRAWING NO	REV
D		700-0022	A

SCALE NONE SHEET 4 OF 5

700-0022 A

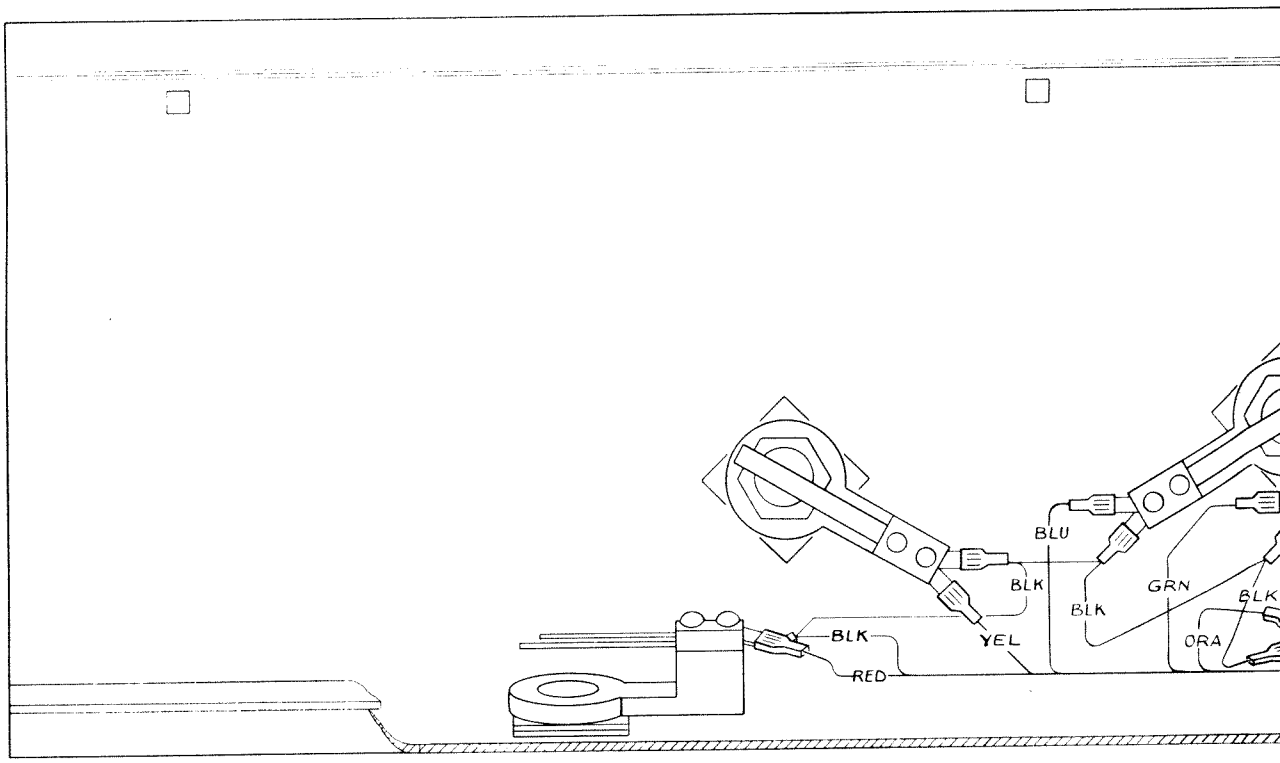

CONTROL PANEL SHOWN FROM COMPONEN

NOTES :

1. MOUNTING NUTS NOT SHOWN ON 1 PLYR & 2 PLYR SWITCHES.
2. CABLE TIES, ITEM 4, FOR DRESSING.

REVISIONS				
ZONE	LTR	DESCRIPTION	DATE	APPROVED
	A	RELEASED I V H	5-20-80	

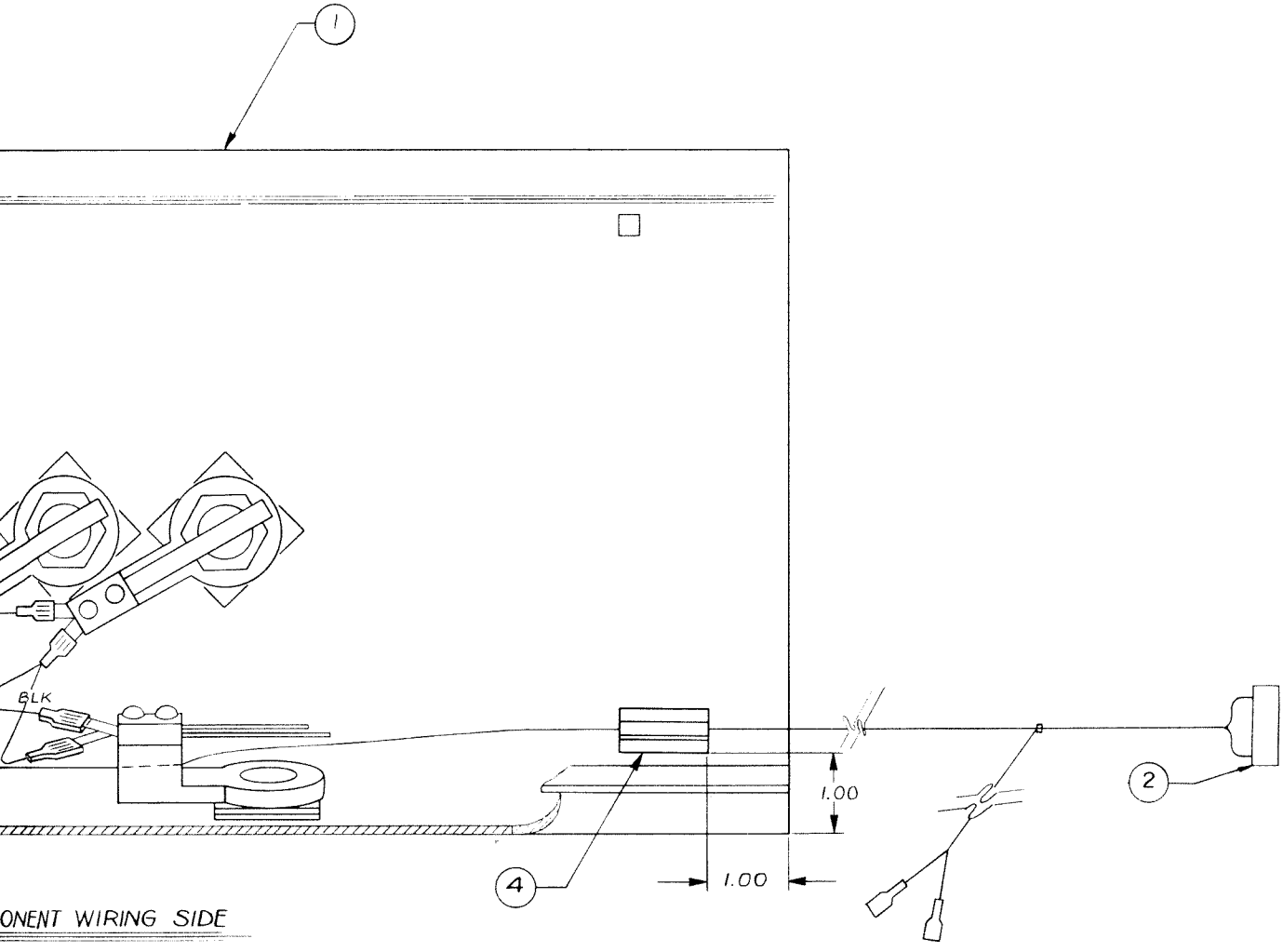

ONENT WIRING SIDE

ITEM NO.	QTY REQD	CODE IDENT	PART OR IDENTIFYING NO.	NOMENCLATURE OR DESCRIPTION
4	1		280-0004	CLIP, WIRE HOLDDOWN
3	4		280-0005	CABLE TIES
2	1		800-3080	ASS'Y CONTROL PANEL HARNESS
1	1		800-3078	ASS'Y CONTROL PANEL

PARTS LIST

UNLESS OTHERWISE SPECIFIED DIMENSIONS ARE IN INCHES
TOLERANCES ARE:
FRACTIONS ± DECIMALS .XX ±.10 .XXX ± ANGLES ±

MATERIAL

FINISH

DO NOT SCALE DRAWING

CONTRACT NO.

APPROVALS	DATE
DRAWN Lien van Ho	5.20.80
CHECKED A. AMBROSE	5-20-80

Gremlin Industries, Inc.
San Diego, California 92123

ASSEMBLY CONTROL PANEL COMPLETE
CARNIVAL UPRIGHT

SIZE	CODE IDENT NO.	DRAWING NO.	REV
D		800-3077	A

SCALE NONE SHEET 1 OF 1

800-3076	CARNIVAL
NEXT ASSY	USED ON
APPLICATION	

800-3077 A

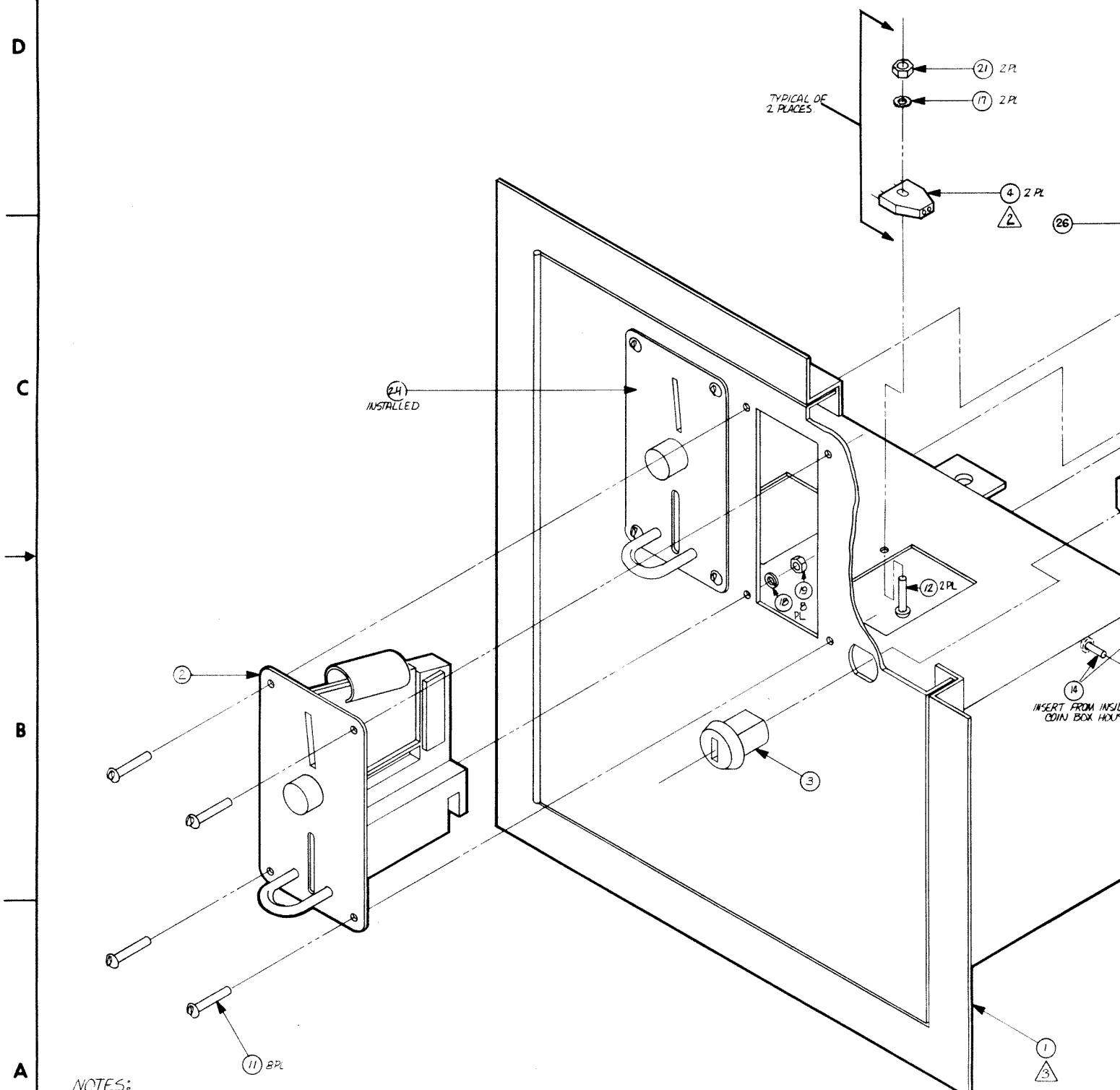

NOTES:

1. ITEM 25 REPLACES JUMPER BD. P N # 170-0176 IN ASSY 800-0085 (ITEM 5) WHEN USED IN THIS ASSY.

2. PRINTED SIDE OF ITEM (4) TO BE FACE DOWN.

REVISIONS				
ZONE	LTR	DESCRIPTION	DATE	APPROVED
	A	RELEASED L.V.M.	5-23-80	

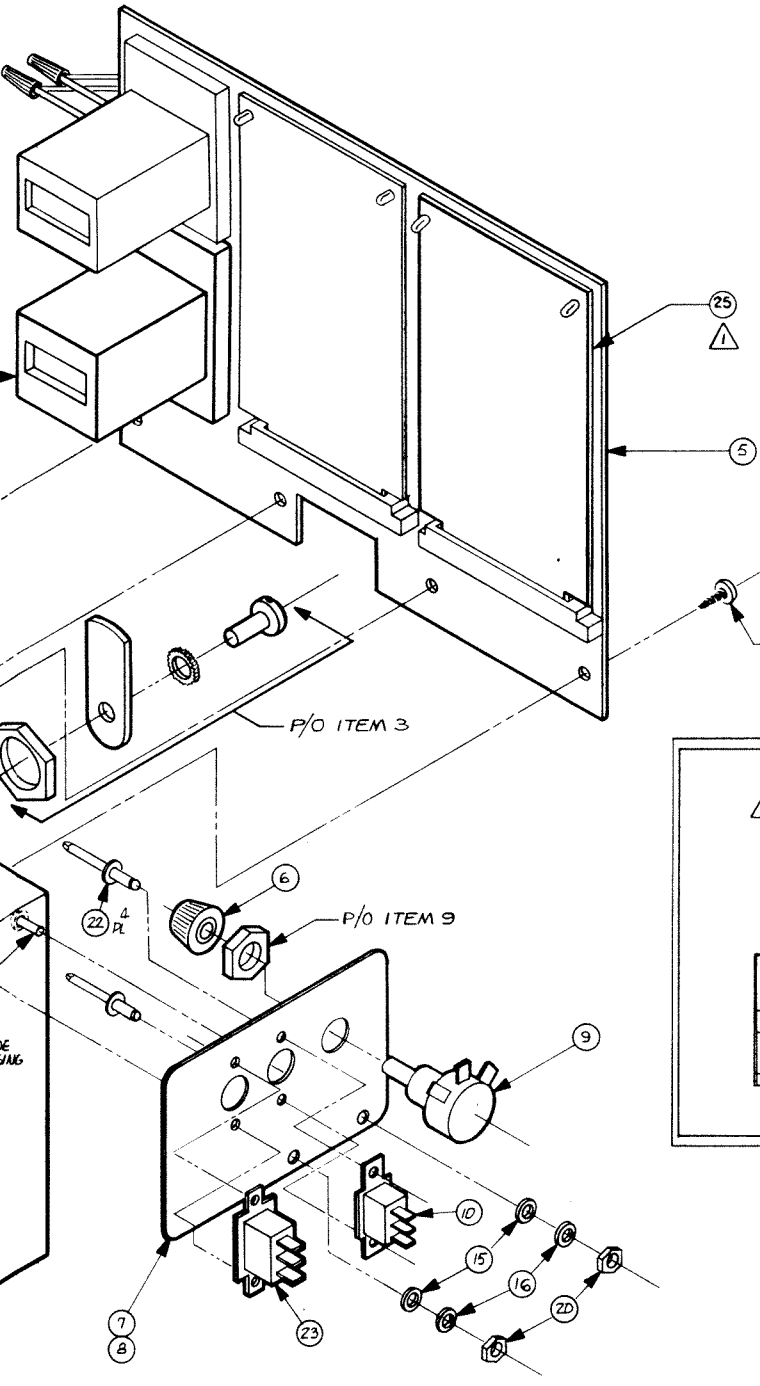

3 CASH BOX, PART OF ITEM (1), MUST HAVE DIVIDER CRIMPED FLAT WITH PLIERS AS SHOWN:

FROM: TO:

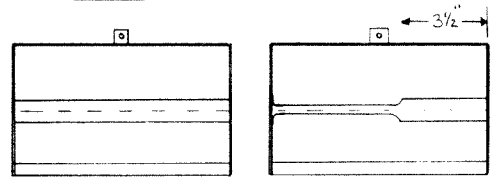

QTY REQD	CODE IDENT	PART OR IDENTIFYING NO.	NOMENCLATURE OR DESCRIPTION

PARTS LIST

UNLESS OTHERWISE SPECIFIED DIMENSIONS ARE IN INCHES
TOLERANCES ARE:
FRACTIONS ± DECIMALS .XX ± .XXX ± ANGLES ±

MATERIAL

FINISH

DO NOT SCALE DRAWING

CONTRACT NO.

APPROVALS	DATE
DRAWN Lien van Ho	5.22.80
CHECKED A. AMBROSE	5-23-80

NEXT ASSY	USED ON
	GEN USAGE

APPLICATION

Gremlin Industries, Inc.
San Diego, California 92123

ASSEMBLY COIN MECH
DUAL SBA

SIZE	CODE IDENT NO.	DRAWING NO.	REV
D		800-3081	A

SCALE NONE SHEET 4 OF 4

800-3081 A

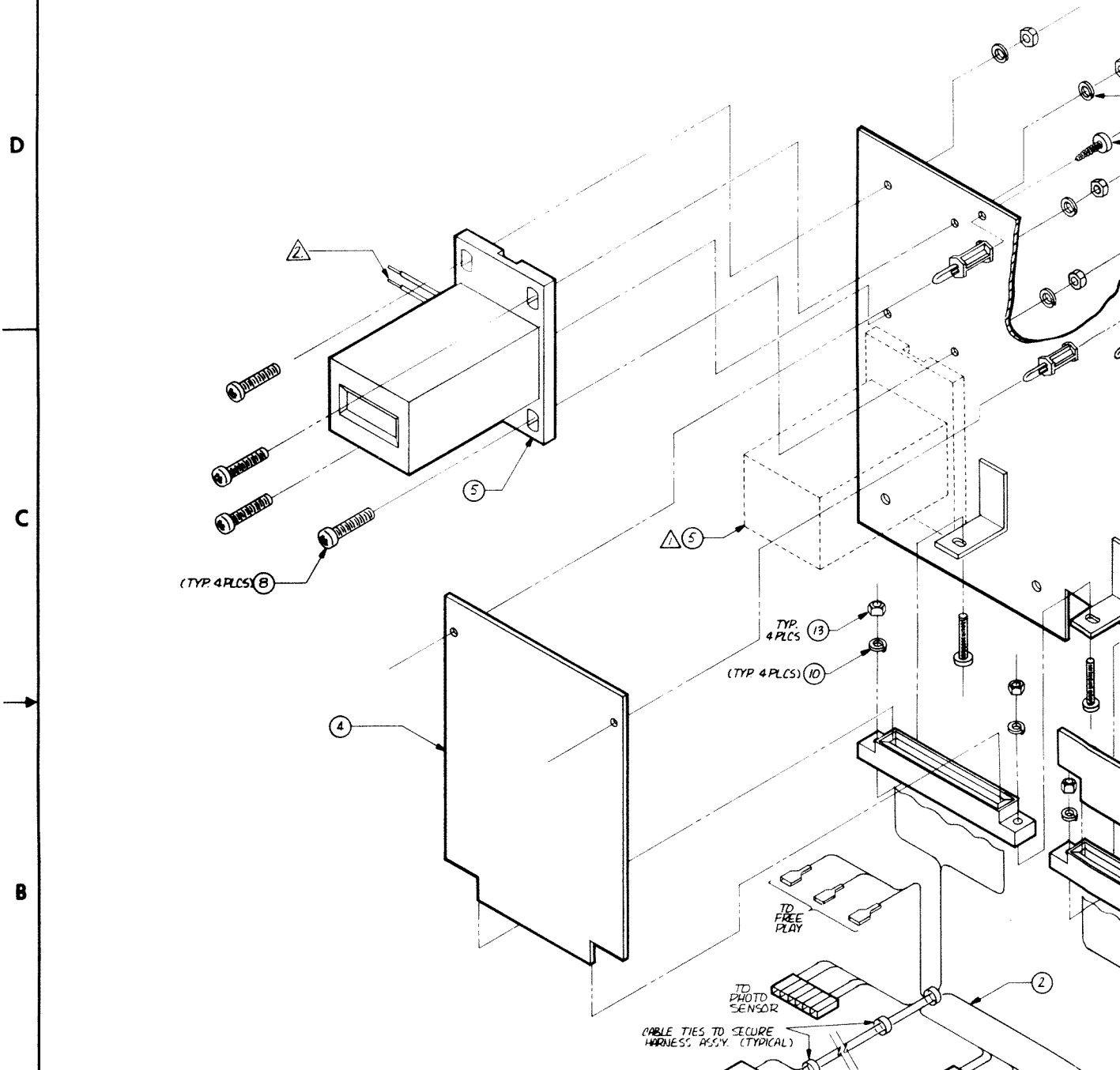

NOTES:

1. ASSEMBLIES SHOWN (ITEMS 4 & 5) ARE AVAILABLE IN KIT FORM FROM GREMLIN INDUSTRIES, INC. THIS WILL ALLOW CUSTOMER TO ADD SECOND CALCULATOR AND COIN COUNTER.
2. CONNECT COIN COUNTER(S) TO HARNESS WITH WIRE NUTS P/N: 280-0075 (2 REQ'D.)
3. EDGE CONNECTORS (ITEM 2) WILL BE ASSEMBLED BY PASSING THROUGH CUTOUT FROM THE REAR AND BOLT INTO PLACE. THE TWO PHOTO SENSOR CONNECTORS WILL REMAIN ON THE FRONT SIDE OF MOUNTING BRACKET TO FACILITATE HOOKUP. THE REMAINDER OF THE HARNESS ASSEMBLY (ITEM 2) WILL EXIT THE CUTOUT TO THE REAR SIDE. THIS IS INTENDED TO PREVENT THE HARNESS FROM POSSIBLY INTERFERRING WITH THE PHOTO SENSORS. (SEE SECTION AA DETAIL.)

REVISIONS				
ZONE	LTR	DESCRIPTION	DATE	APPROVED
	A	RELEASED	1-21-80	
	B	CHG'D PER ECN 387		

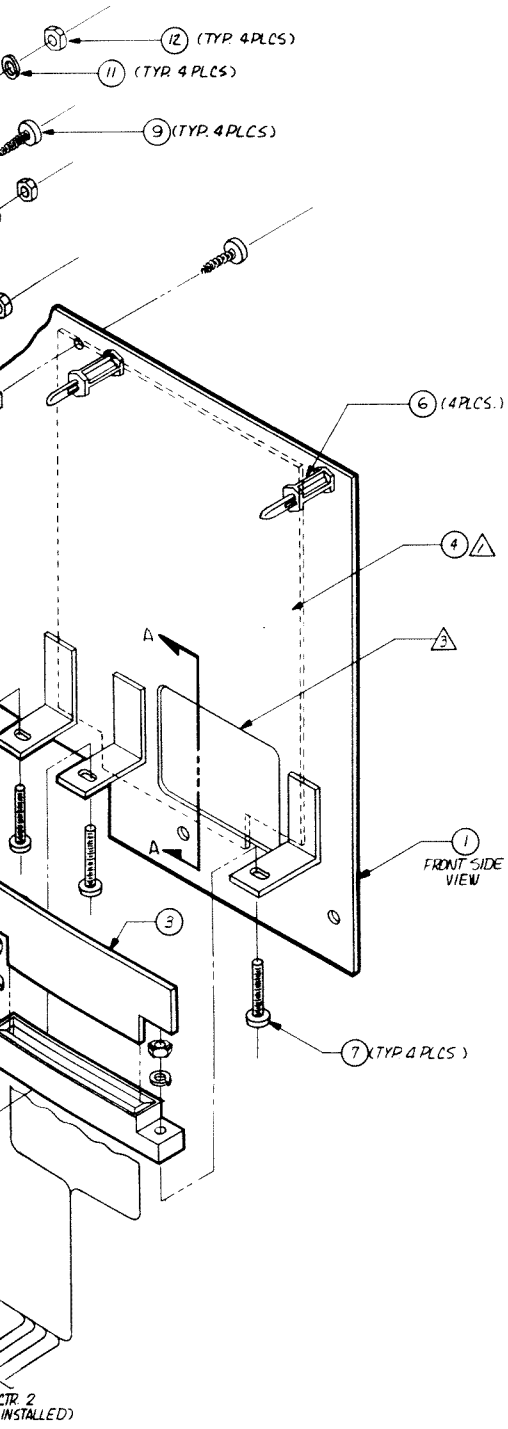

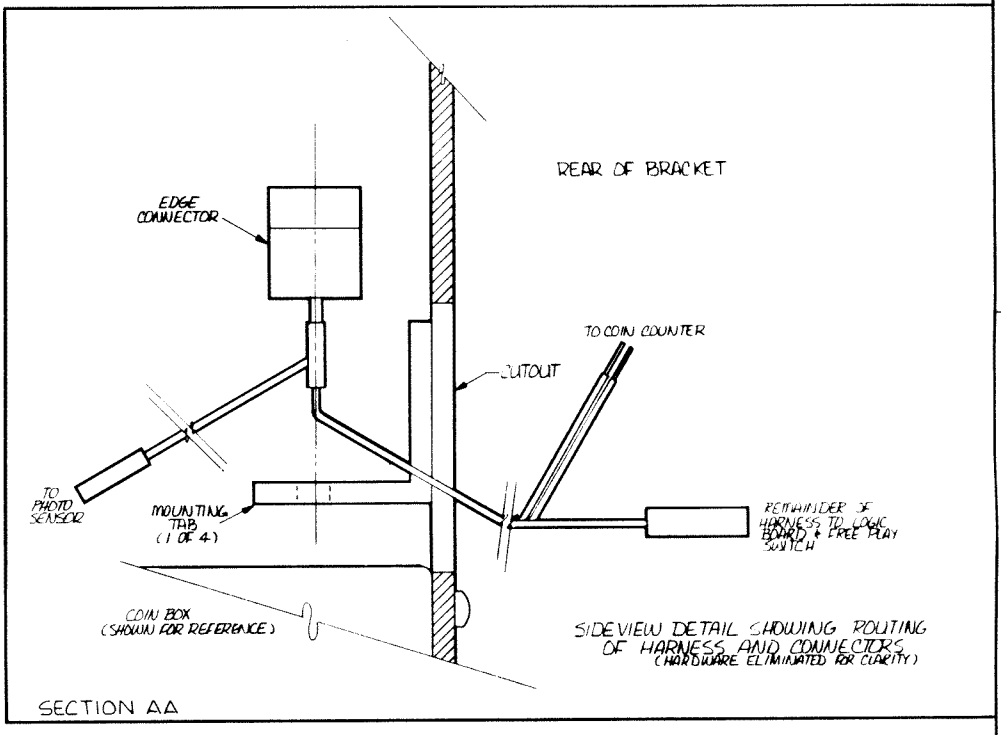

ITEM	QTY REQD	CODE IDENT	PART OR IDENTIFYING NO.	NOMENCLATURE OR DESCRIPTION
14	2		280-0075	NUT WIRE
13	4			NUT, HEX 4-40
12	4			NUT, HEX 6-32
11	4			WSHR. SPLIT LOCK #6
10	4			WSHR. SPLIT LOCK #4
9	4			SCREW, SH. MTL. PHL. #6
8	4			SCREW, MACH. P.H. PHL. 6-32 x 1/2"
7	4			SCREW, MACH. P.H. PHL. 4-40 x 3/4"
6	4		280-0014	STAND-OFF 1/2"
5	1		220-0008	COIN COUNTER
4	1		800-0076	ASSY PHOTO COIN CALCULATOR
3	1		170-0186	JUMPER BOARD
2	1		800-0086	ASS'Y HARN. COIN CALCULATOR
1	1		250-0379	BRACKET COIN CALCULATOR

PARTS LIST

UNLESS OTHERWISE SPECIFIED DIMENSIONS ARE IN INCHES TOLERANCES ARE:
FRACTIONS ± DECIMALS .XX ± .XXX ± ANGLES ±

MATERIAL: NOTED

FINISH

DO NOT SCALE DRAWING

CONTRACT NO.

APPROVALS	DATE
DRAWN Ron Hawthee	1-17-80
CHECKED Scott Cameron	1-21-80

Gremlin Industries, Inc.
San Diego, California 92123

TOP ASSEMBLY
PHOTO CALCULATOR

SIZE	CODE IDENT NO.	DRAWING NO	REV
D		800-0085	B

SCALE NONE SHEET 1 OF 1

NEXT ASSY	USED ON
APPLICATION	

800 0085 B

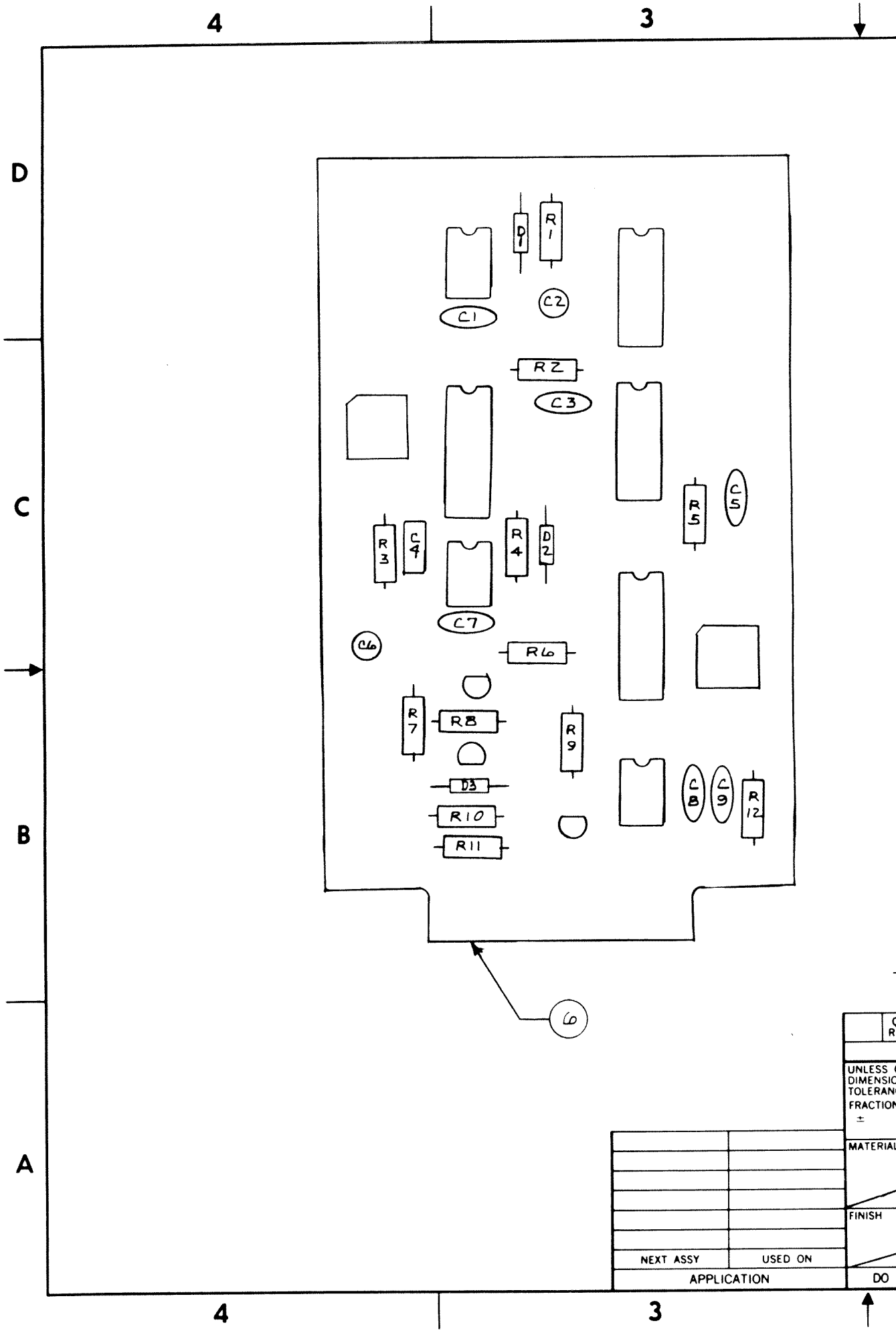
4
3
D
C
B
A
D1
R1
C1
C2
R2
C3
R5
C5
R3
C4
R4
D2
C7
C6
R6
R7
R8
R9
D3
R10
R11
C8
C9
R12
6
UNLESS
DIMENSIO
TOLERAN
FRACTION
MATERIAL
FINISH
NEXT ASSY
USED ON
APPLICATION
DO

2 1

REVISIONS				
ZONE	LTR	DESCRIPTION	DATE	APPROVED
	A	RELEASED WJB	12-18-79	[illegible]
	B	PER ECN 366 WJB	1-2-80	[illegible]

D

C

800-0076 B

B

SEE DETACHED PARTS LIST

QTY REQD	CODE IDENT	PART OR IDENTIFYING NO.	NOMENCLATURE OR DESCRIPTION	

PARTS LIST

LESS OTHERWISE SPECIFIED
MENSIONS ARE IN INCHES
LERANCES ARE:
ACTIONS DECIMALS ANGLES
± .XX ± ±
.XXX ±

TERIAL

ISH

DO NOT SCALE DRAWING

CONTRACT NO.

APPROVALS	DATE
DRAWN Wyszema	12-14-79
CHECKED [illegible]	12/18/79

Gremlin Industries, Inc.
San Diego, California 92123

P. C. ASSEMBLY
PHOTO COIN CALC

A

SIZE	CODE IDENT NO.	DRAWING NO.	REV
C		800-0076	B

SCALE 2/1 SHEET 4 OF 5

2 1

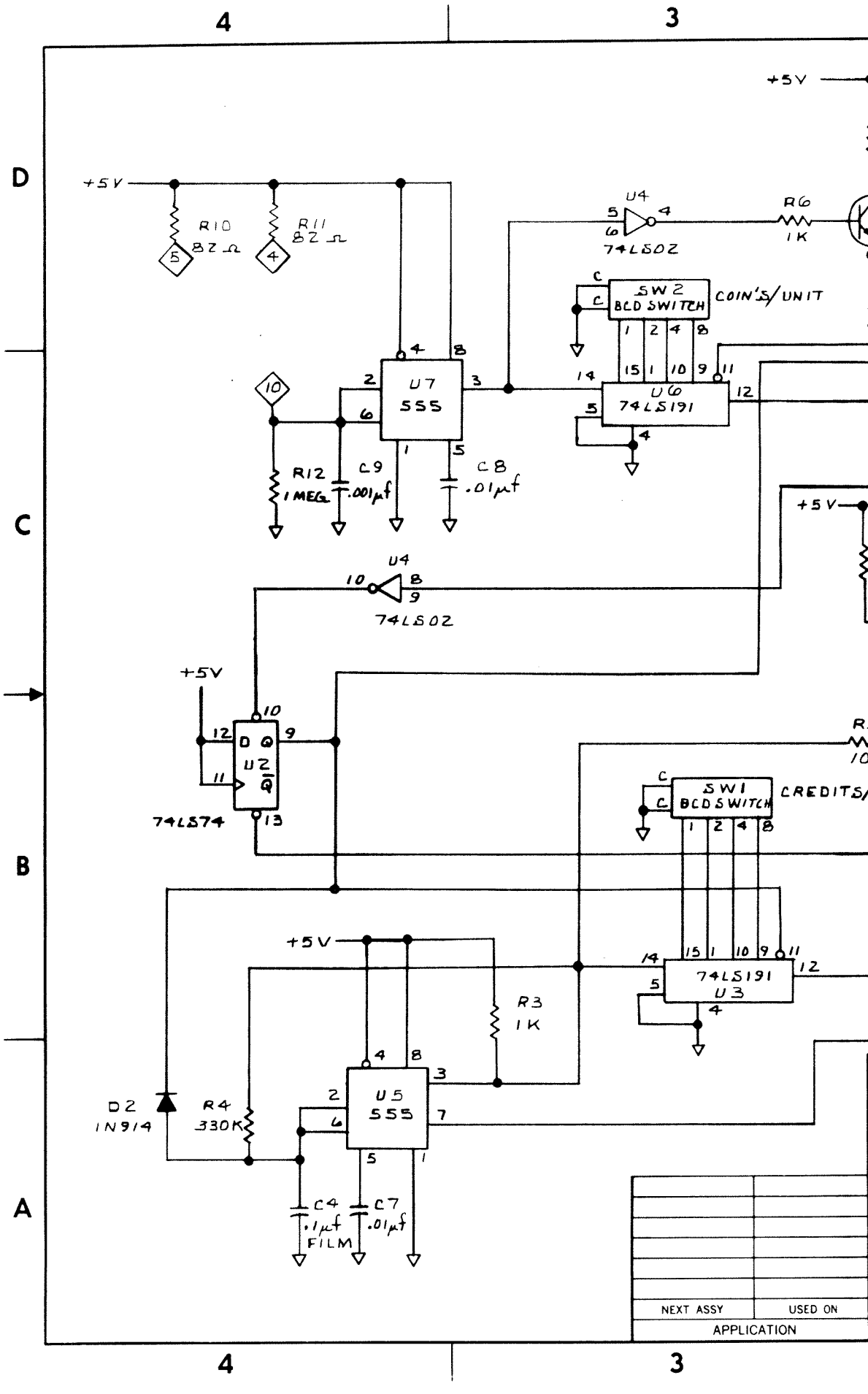
4
3
D
C
B
A
+5V
R10
82Ω
R11
82Ω
U4
74LS02
R6
1K
SW2
BCD SWITCH
COIN'S/UNIT
1 2 4 8
U7
555
U6
74LS191
R12
1 MEG
C9
.001μf
C8
.01μf
U4
74LS02
+5V
U2
74LS74
SW1
BCD SWITCH
CREDITS/
74LS191
U3
R3
1K
D2
IN914
R4
330K
U5
555
C4
.1μf
FILM
C7
.01μf
NEXT ASSY
USED ON
APPLICATION

REVISIONS				
ZONE	LTR	DESCRIPTION	DATE	APPROVED
	A	RELEASED WJB	12-18-79	
	B	PER ECN 366 WJB	1-2-80	

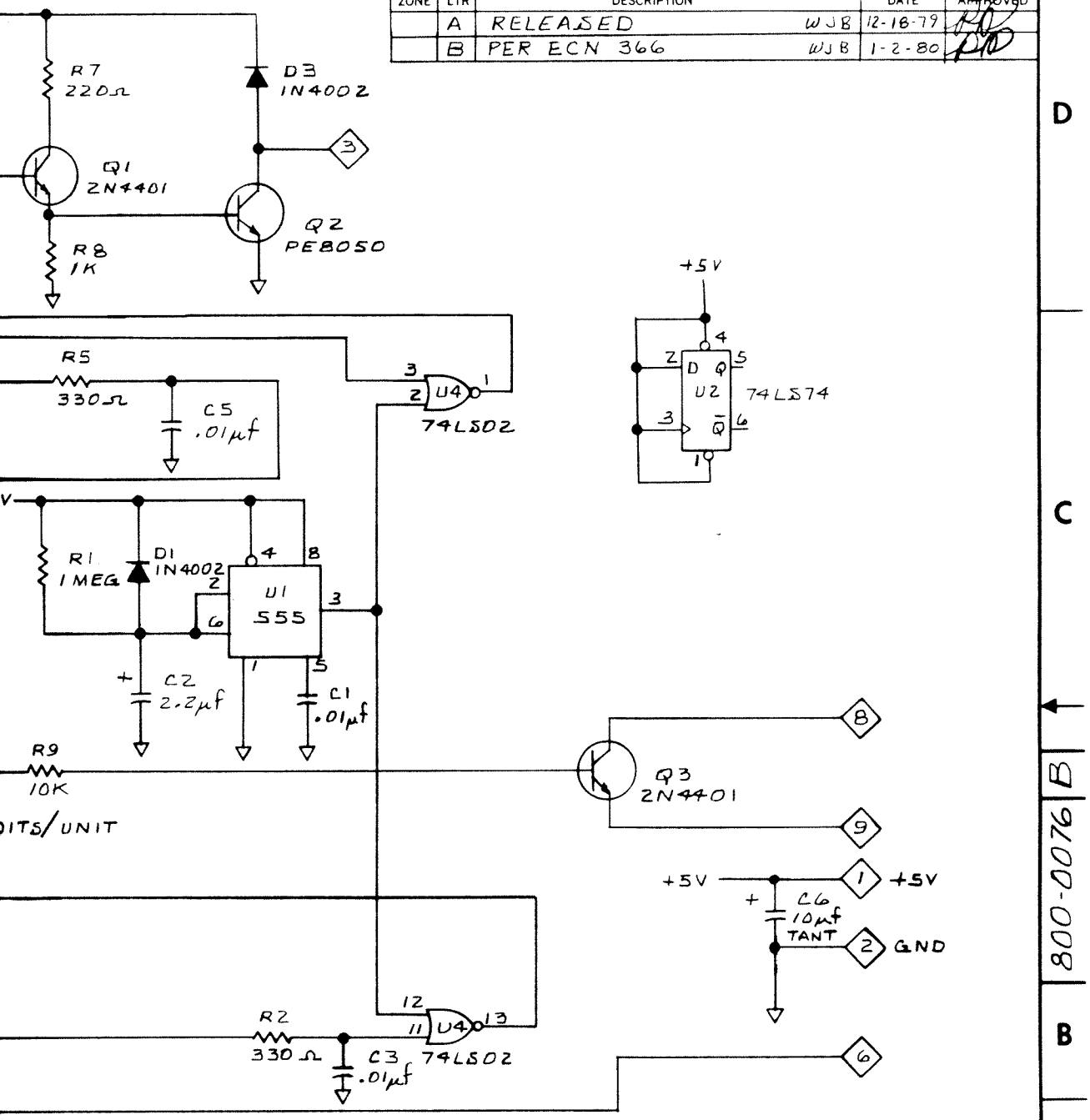

QTY REQD	CODE IDENT	PART OR IDENTIFYING NO.	NOMENCLATURE OR DESCRIPTION

PARTS LIST

UNLESS OTHERWISE SPECIFIED DIMENSIONS ARE IN INCHES
TOLERANCES ARE:
FRACTIONS ± DECIMALS .XX ± .XXX ± ANGLES ±

MATERIAL

FINISH

DO NOT SCALE DRAWING

CONTRACT NO.

APPROVALS	DATE
DRAWN Wynema	11-29-79
CHECKED	10/18/79

Gremlin Industries, Inc.
San Diego, California 92123

SCHEMATIC —
PHOTO COIN CALC.

SIZE	CODE IDENT NO.	DRAWING NO.	REV
C		800-0076	B

SCALE NONE SHEET 5 OF 5

800-0076 B

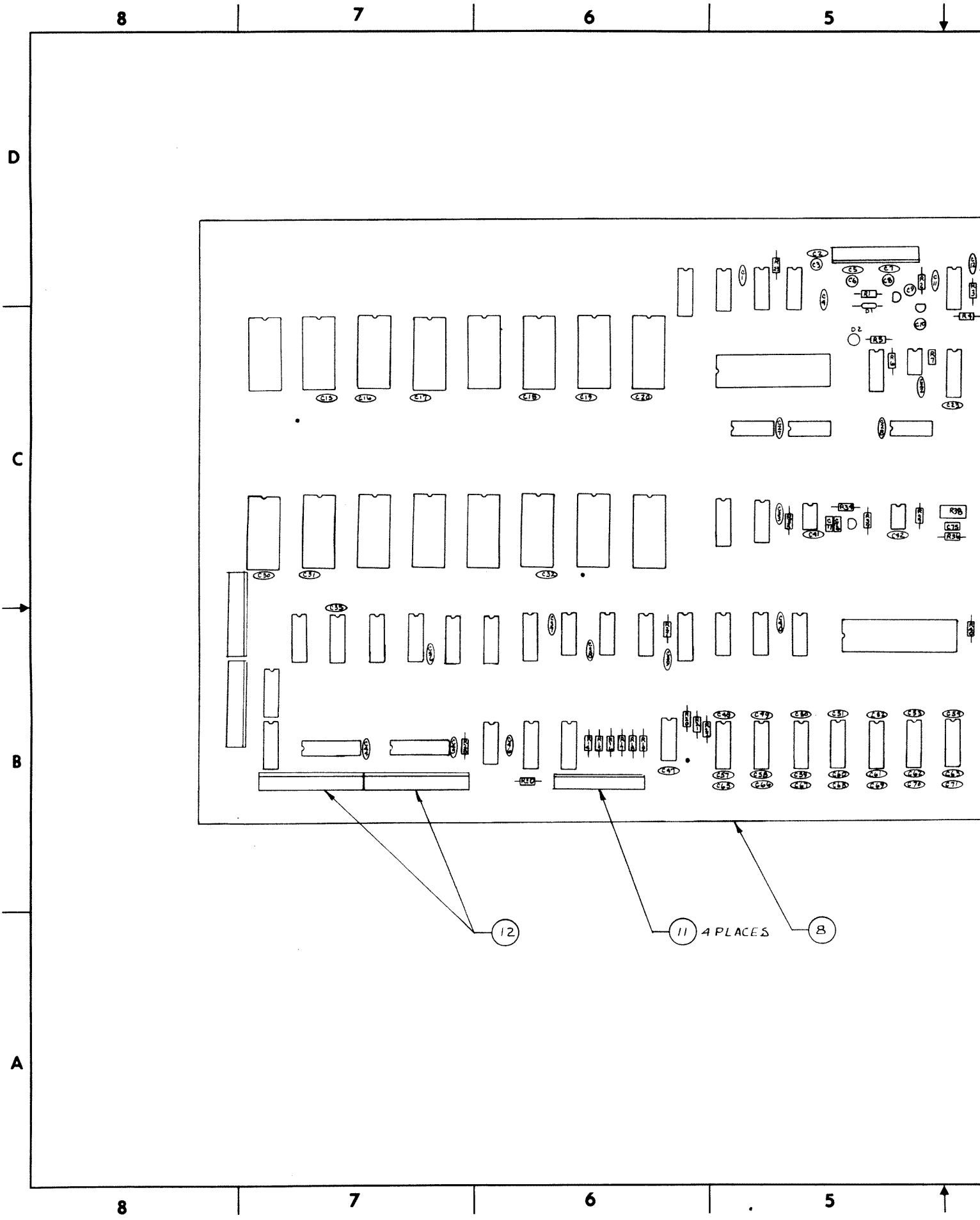
8
7
6
5
D
C
B
A
12
11
4 PLACES
8

REVISIONS				
ZONE	LTR	DESCRIPTION	DATE	APPROVED
	A	RELEASED WJB	10-17-79	
	B	PER ECN 350 WJB	10-23-79	
	C	PER ECN 359 WJB	11-26-79	
	D	PER ECN 368 WJB	1-28-80	

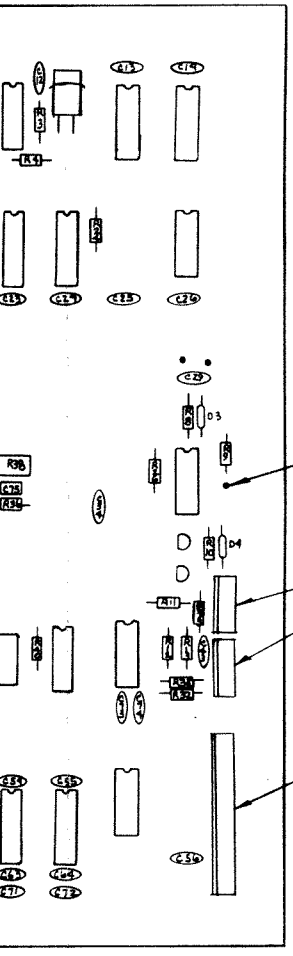

9 6 PLACES

10

12

SEE DETACHED PARTS LIST

QTY REQD	CODE IDENT	PART OR IDENTIFYING NO.	NOMENCLATURE OR DESCRIPTION
			PARTS LIST

UNLESS OTHERWISE SPECIFIED DIMENSIONS ARE IN INCHES
TOLERANCES ARE:
FRACTIONS ± DECIMALS .XX ± .XXX ± ANGLES ±

MATERIAL

FINISH

DO NOT SCALE DRAWING

CONTRACT NO.

APPROVALS	DATE
DRAWN Wynema	10-2-79
CHECKED	10/17/79

Gremlin Industries, Inc.
San Diego, California 92123

P C ASSEMBLY —
DUAL GAME V.I.C.

SIZE	CODE IDENT NO.	DRAWING NO.	REV
D		800-0058	D

SCALE 2/1 SHEET 5 OF 8

NEXT ASSY	USED ON
APPLICATION	

800-0058 D

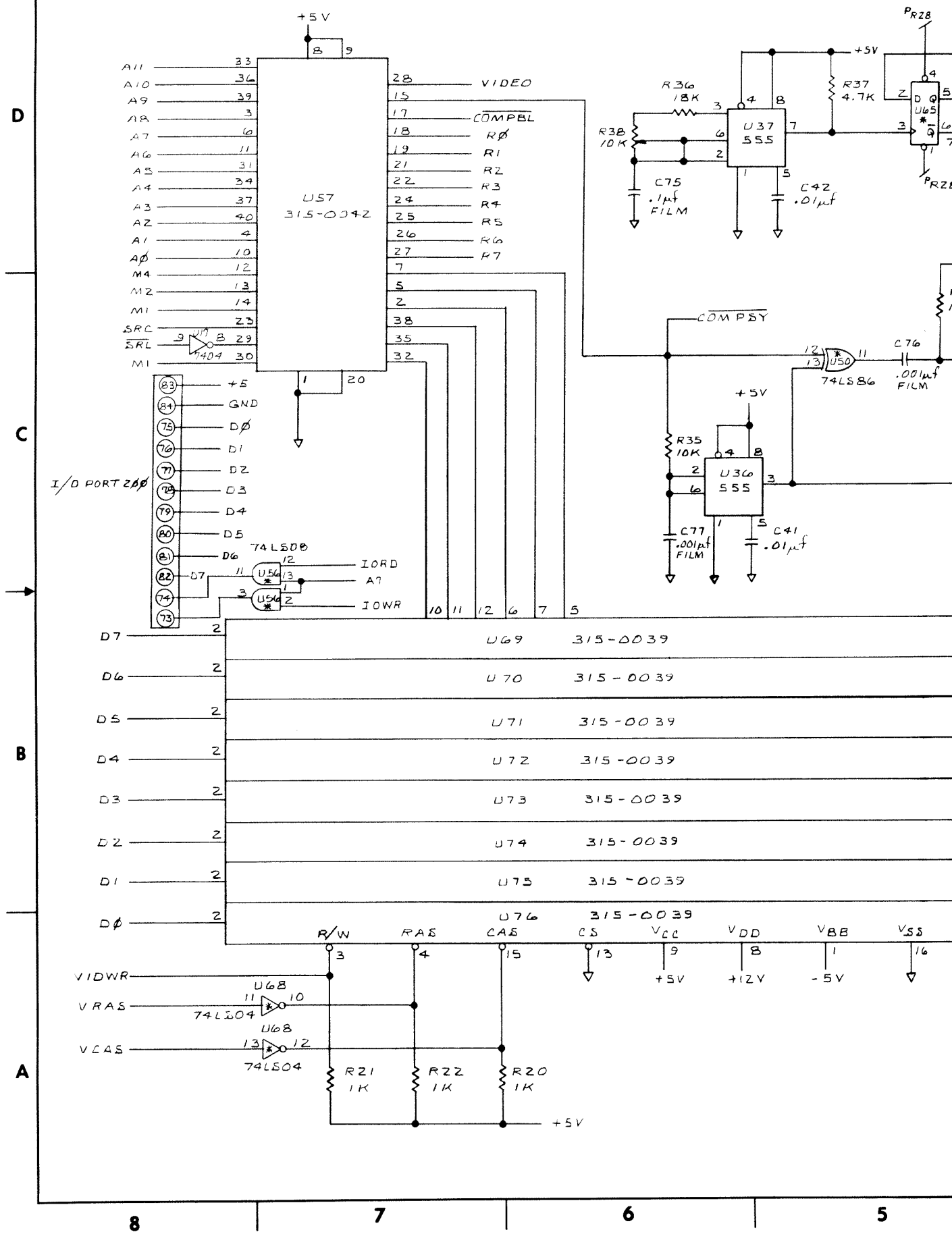
8
7
6
5
D
C
B
A
+5V
U57
315-0042
A11
A10
A9
A8
A7
A6
A5
A4
A3
A2
A1
A0
M4
M2
M1
SRC
SRL
M1
VIDEO
COMPBL
R0
R1
R2
R3
R4
R5
R6
R7
U17
7404
I/O PORT 200
+5
GND
D0
D1
D2
D3
D4
D5
D6
D7
74LS08
U56
IORD
A7
IOWR
R36
18K
R37
4.7K
R38
10K
U37
555
C75
.1µf
FILM
C42
.01µf
U65
PR28
PRZ8
COMPSY
U50
74LS86
C76
.001µf
FILM
R35
10K
U36
555
C77
.001µf
FILM
C41
.01µf
U69 315-0039
U70 315-0039
U71 315-0039
U72 315-0039
U73 315-0039
U74 315-0039
U75 315-0039
U76 315-0039
R/W
RAS
CAS
CS
VCC
VDD
VBB
VSS
+5V
+12V
-5V
VIDWR
VRAS
VCAS
U68
74LS04
R21
1K
R22
1K
R20
1K

REVISIONS				
ZONE	LTR	DESCRIPTION	DATE	APPROVED
	A	RELEASED WJB	10-17-79	[illegible]
	B	PER ECN 350 WJB	[illegible]	[illegible]
	C	PER ECN 359 WJB	[illegible]	[illegible]
	D	PER ECN 368 WJB	[illegible]	[illegible]

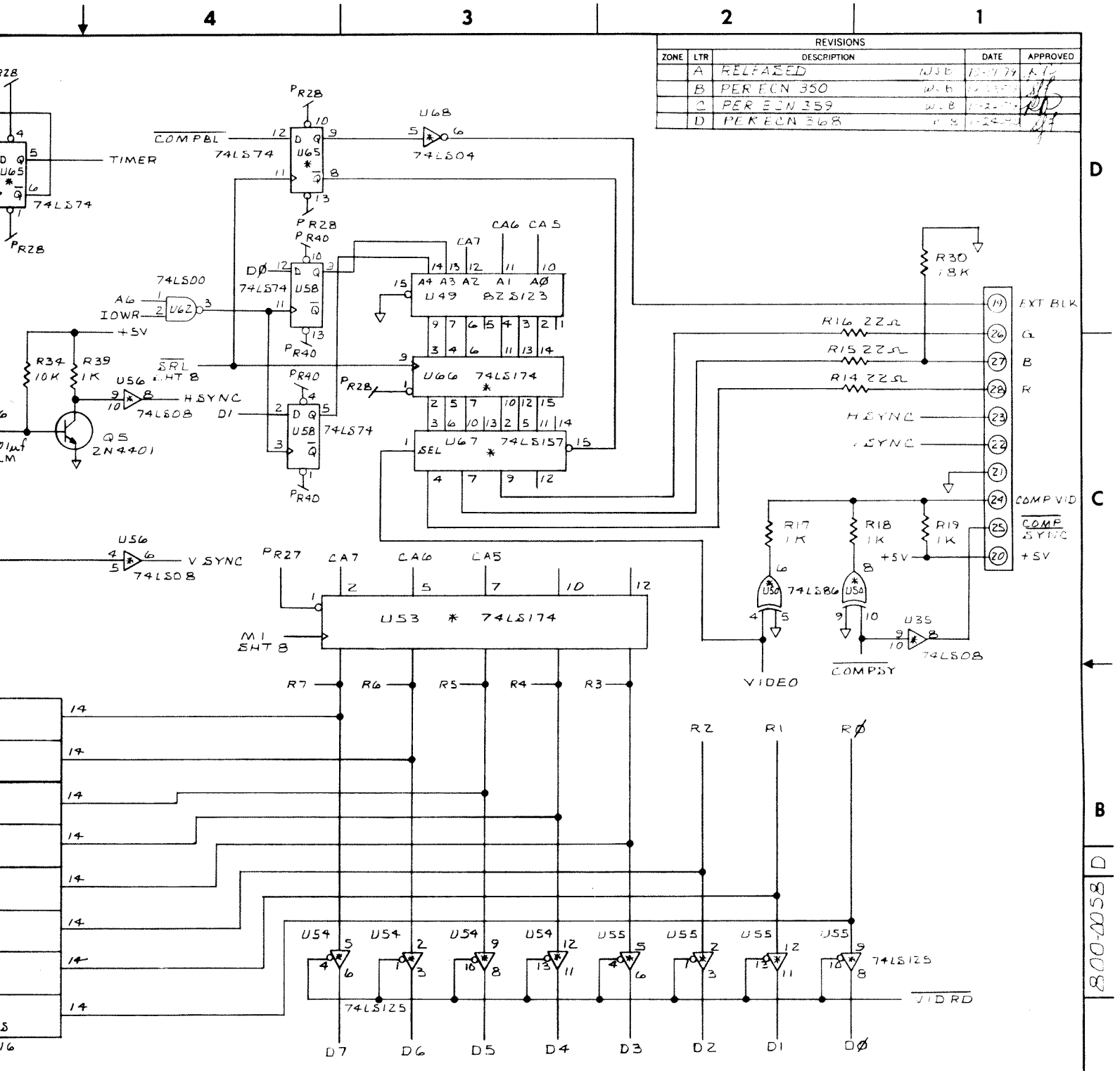

QTY REQD	CODE IDENT	PART OR IDENTIFYING NO.	NOMENCLATURE OR DESCRIPTION

PARTS LIST

UNLESS OTHERWISE SPECIFIED DIMENSIONS ARE IN INCHES TOLERANCES ARE:
FRACTIONS ± DECIMALS .XX ± .XXX ± ANGLES ±

MATERIAL

FINISH

DO NOT SCALE DRAWING

CONTRACT NO.

APPROVALS	DATE
DRAWN Wynema	9-21-79
CHECKED [illegible]	10/11/79

Gremlin Industries, Inc.
San Diego, California 92123

SCHEMATIC — DUAL GAME V.I.C.

SIZE	CODE IDENT NO.	DRAWING NO.	REV
D		800-0058	D

SCALE NONE SHEET 6 OF 8

NEXT ASSY	USED ON
APPLICATION	

800-0058 D

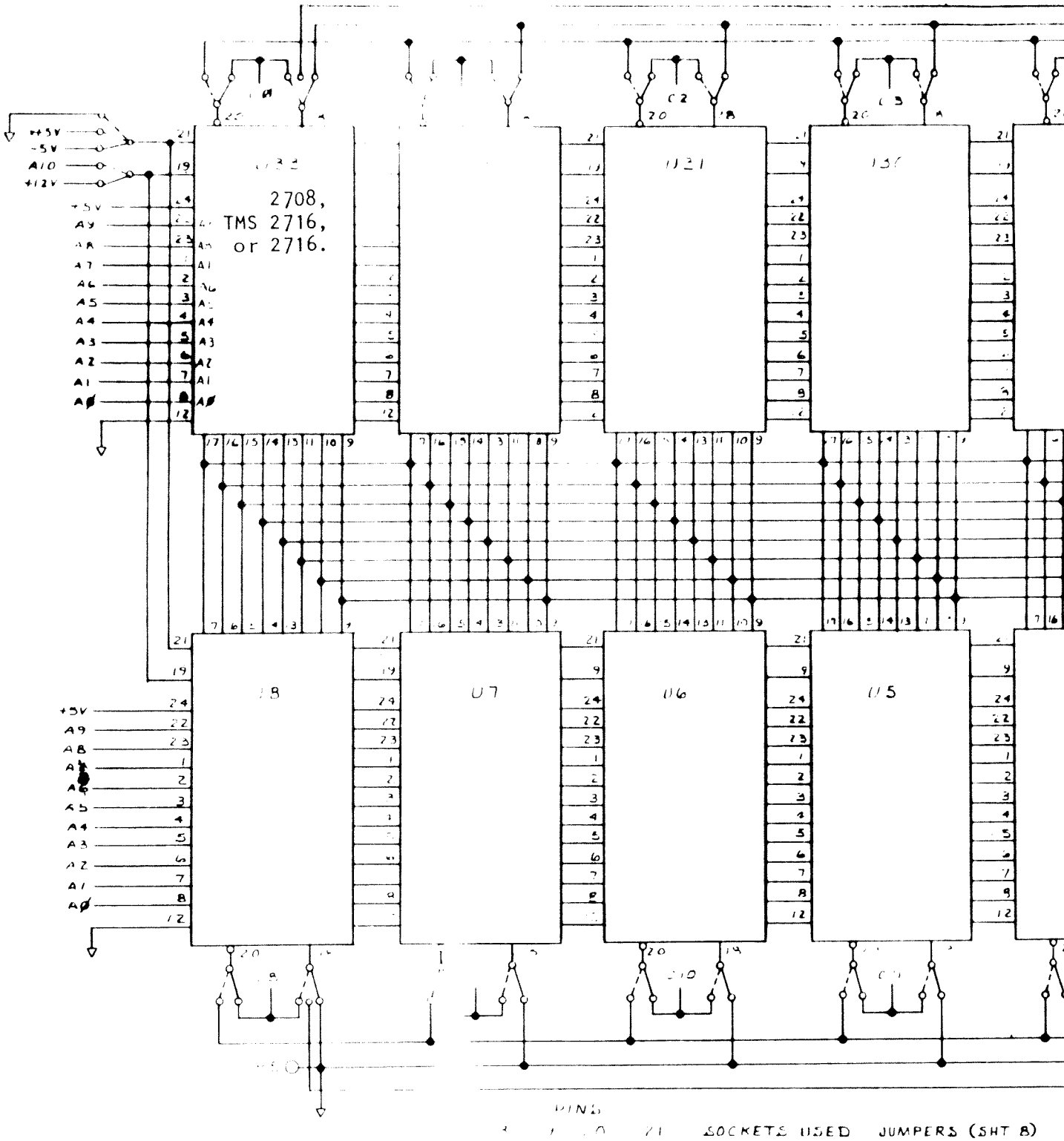

PINS 21	20	19	SOCKETS USED	JUMPERS (SHT 8)
GND	+5V	N	-5V	ALL	E1-E2, E5-E6, E8-E9, E11-E12
		A10	-5V	U33, U31, U29, U27, U8, U6, U4, U2	E1-E3, E5-E6, E8-E9, E11-E12
	A10	+5V	U33, U31, U29, U27, U8, U6, U4, U2	E1-E5, E5-E6, E8-E9, E11-E12
CN	A10	CN	A11	U33, U29, U8, U4	E1-E3, E5-E14, E8-E9, E11-E12
A11	A10	CN	GND	U33, U29, U8, U4	E1-E3, E5-E14, E8-E9, E11-E12

NOTES:

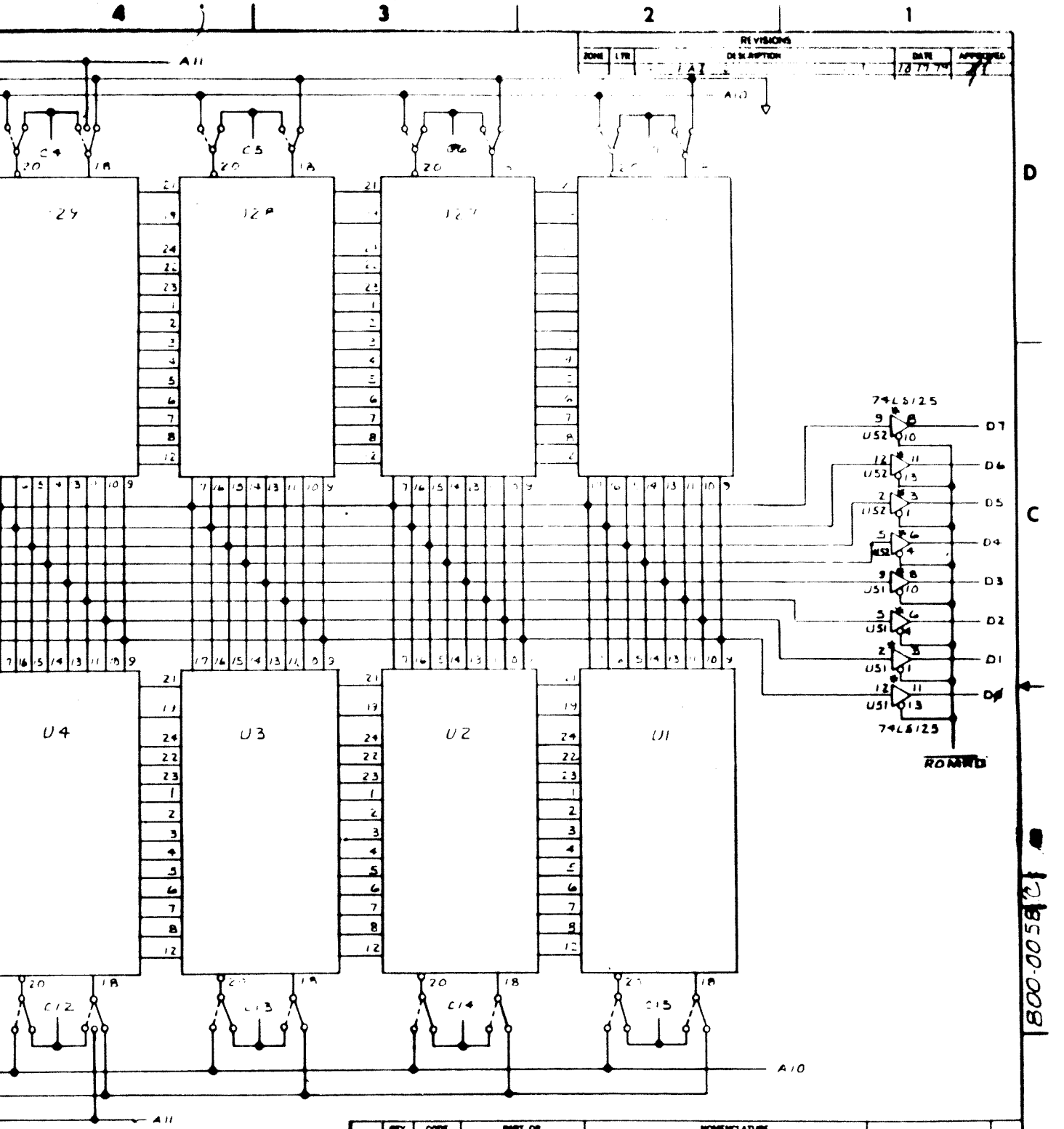

QTY REQD	CODE IDENT	PART OR IDENTIFYING NO	NOMENCLATURE OR DESCRIPTION

PARTS LIST

UNLESS OTHERWISE SPECIFIED DIMENSIONS ARE IN INCHES TOLERANCES ARE:
FRACTIONS ± DECIMALS .XX ± .XXX ± ANGLES ±

MATERIAL

FINISH

CONTRACT NO.

APPROVALS	DATE
DRAWN	1 20 77
CHECKED	4/1/79

Gremlin Industries, Inc.
San Diego, California 92123

SCHEMATIC — DUAL GAME V.I.C.

SIZE	CODE IDENT NO	DRAWING NO	REV
D		800-0058	

SCALE NONE SHEET 7 OF 8

NEXT ASSY | USED ON
APPLICATION

DO NOT SCALE DRAWING

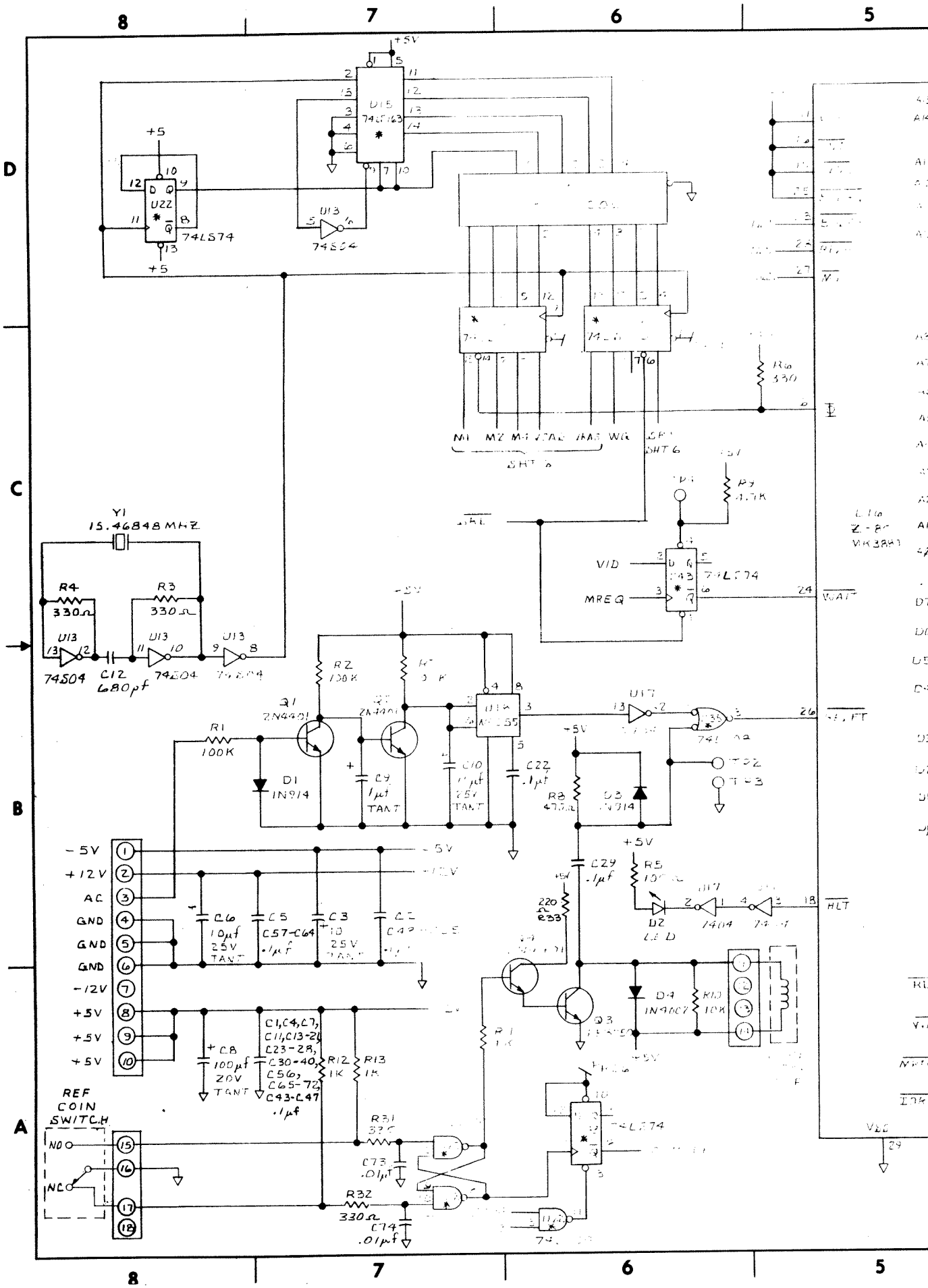

8
7
6
5
D
C
B
A
+5V
U15
74LS163
U22
74LS74
U13
74S04
Y1
15.46848 MHZ
R4
330Ω
R3
330Ω
C12
680pf
R2
100K
Q1
2N4401
R1
100K
D1
1N914
C9
1μf
TANT
C10
C22
.1μf
R8
D3
1N914
U17
74LS74
VID
MREQ
R6
330
R9
4.7K
C29
.1μf
R5
D2
LED
7404
HLT
D4
1N4007
R10
10K
Q3
R33
220Ω
-5V
+12V
AC
GND
-12V
C6
10μf
25V
TANT
C5
C57-C64
.1μf
C3
10
25V
C8
100μf
20V
TANT
C1,C4,C7,
C11,C13-21,
C23-28,
C30-40,
C56,
C65-72,
C43-C47
.1μf
R12
1K
R13
1K
REF
COIN
SWITCH
NO
NC
R31
C73
.01μf
R32
330Ω
C74
.01μf
74LS74

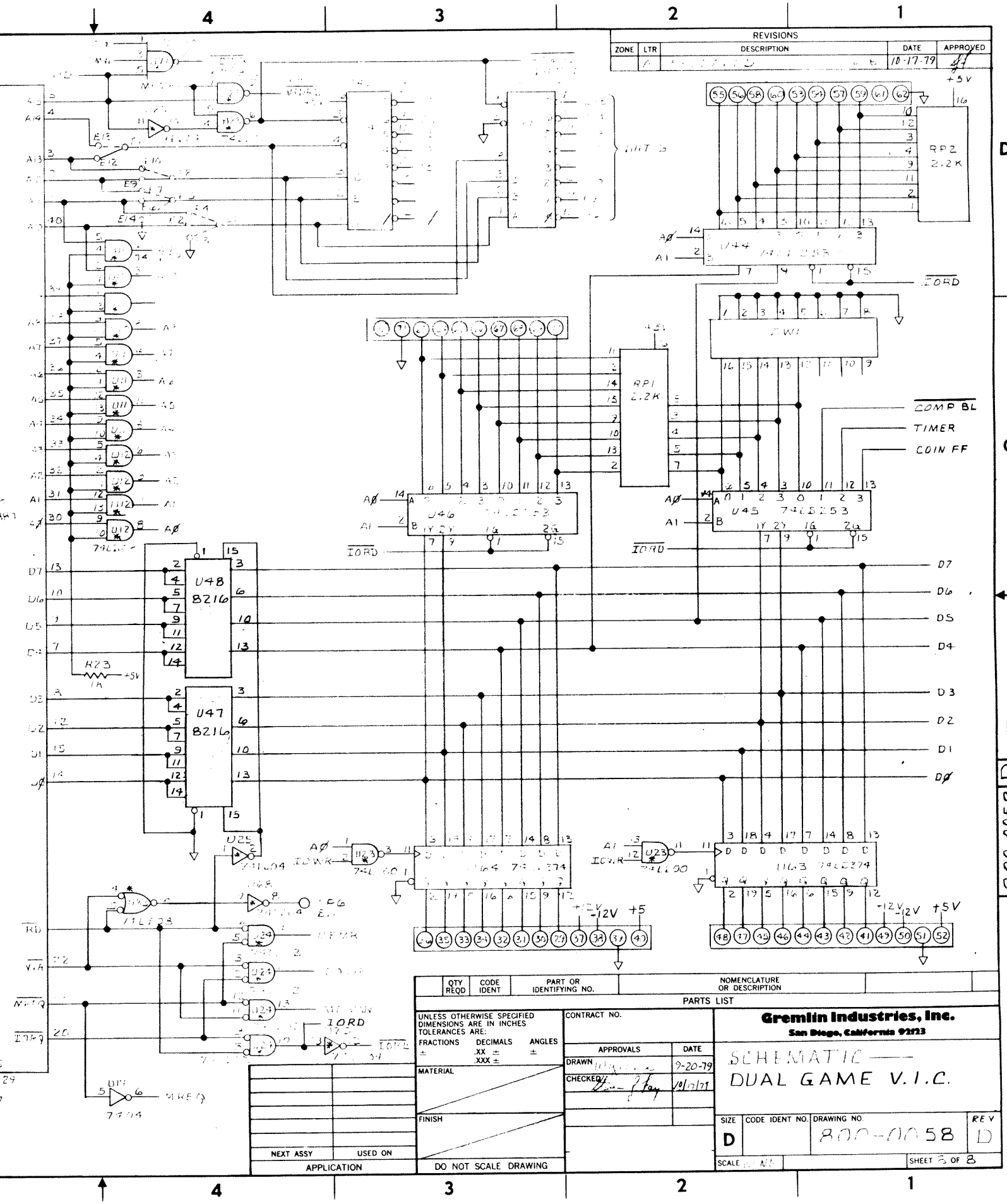

REVISIONS
ZONE
LTR
DESCRIPTION
DATE
APPROVED
10-17-79
RP2 2.2K
RP1 2.2K
U44 74LS253
U45 74LS253
U46 74LS253
U48 8216
U47 8216
U64 74LS374
U63 74LS374
U25 74LS04
U23 74LS00
U24 74LS28
U11 74LS04
U12 74LS04
U17 7404
R23 1K
+5V
-12V
+12V
IORD
COMP BL
TIMER
COIN FF
D7
D6
D5
D4
D3
D2
D1
DØ
QTY REQD
CODE IDENT
PART OR IDENTIFYING NO.
NOMENCLATURE OR DESCRIPTION
PARTS LIST
UNLESS OTHERWISE SPECIFIED DIMENSIONS ARE IN INCHES TOLERANCES ARE:
FRACTIONS ±
DECIMALS .XX ± .XXX ±
ANGLES ±
MATERIAL
FINISH
DO NOT SCALE DRAWING
CONTRACT NO.
APPROVALS
DATE
DRAWN
9-20-79
CHECKED
10/17/79
Gremlin Industries, Inc.
San Diego, California 92123
SCHEMATIC
DUAL GAME V.I.C.
SIZE D
CODE IDENT NO.
DRAWING NO. 800-0058
REV D
SCALE
SHEET 8 OF 8
NEXT ASSY
USED ON
APPLICATION
800-0058 D

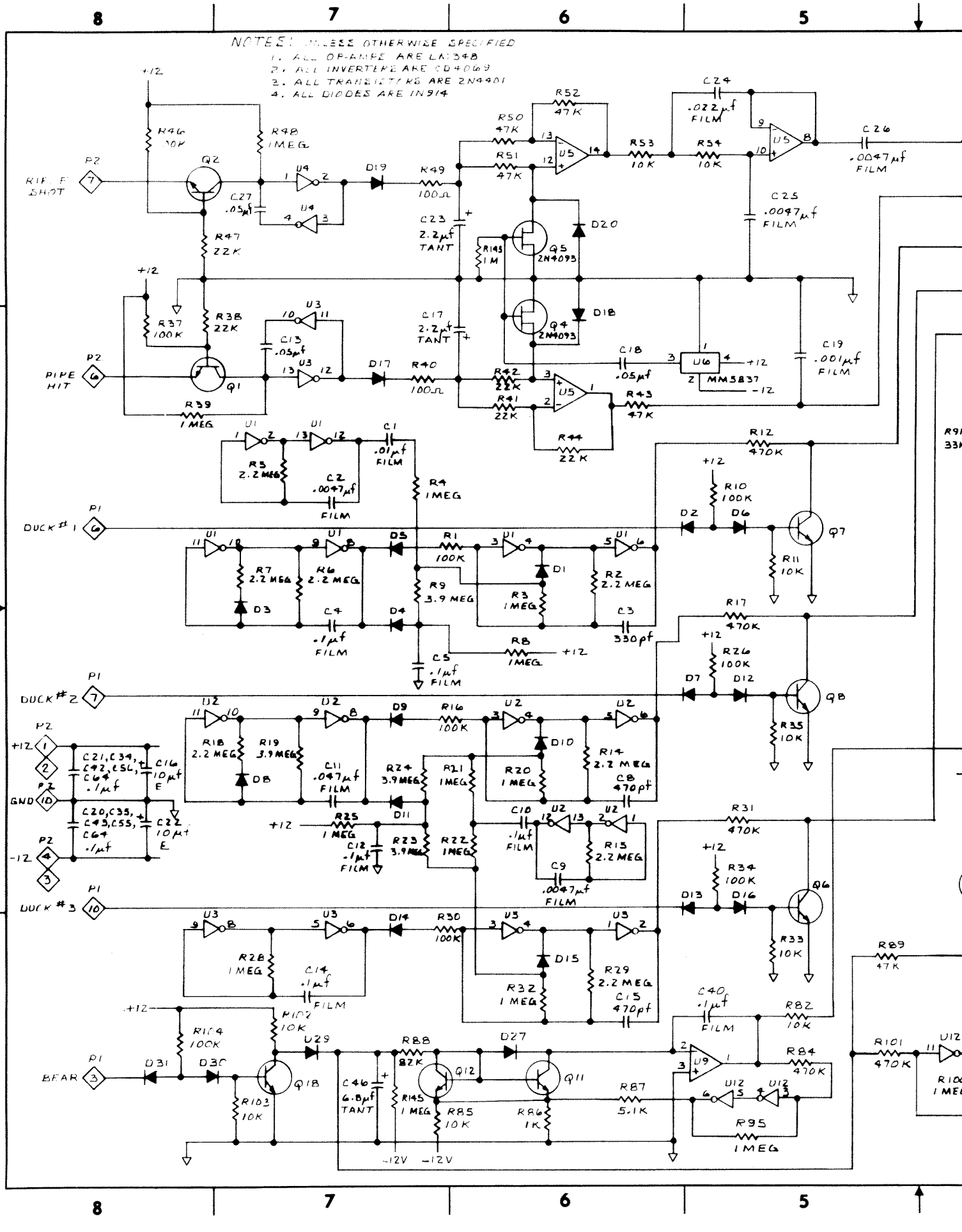
NOTES: UNLESS OTHERWISE SPECIFIED
1. ALL OP-AMPS ARE LM348
2. ALL INVERTERS ARE CD4069
3. ALL TRANSISTORS ARE 2N4401
4. ALL DIODES ARE IN914
RIFLE SHOT
PIPE HIT
DUCK #1
DUCK #2
DUCK #3
BEAR
GND
MM5837
2N4093
2N4093
+12
-12
-12V
8
7
6
5
D
C
B
A

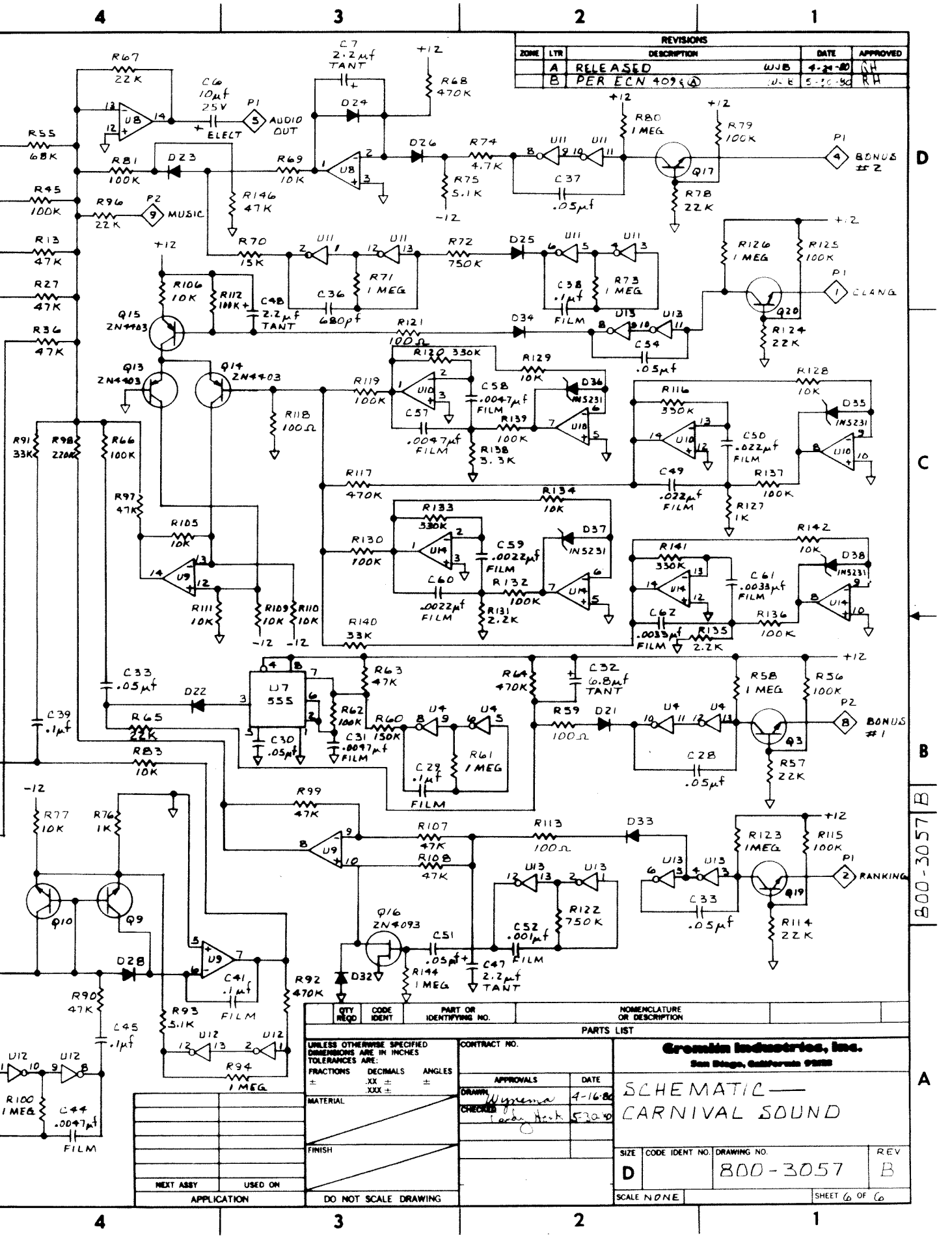

REVISIONS
ZONE | LTR | DESCRIPTION | DATE | APPROVED
A | RELEASED | WJB | 4-24-80 | RH
B | PER ECN 409 & Ⓐ | WJB | 5-30-80 | RH
AUDIO OUT
MUSIC
BONUS #2
CLANG
BONUS #1
RANKING
U7 555
Q15 2N4403
Q13 2N4403
Q14 2N4403
Q16 2N4093
Q17
Q20
Q3
Q19
Q10
Q9
D22
D23
D24
D25
D26
D28
D32
D33
D34
D35
D36
D37
D38
1N5231
+12
-12
QTY REQD | CODE IDENT | PART OR IDENTIFYING NO. | NOMENCLATURE OR DESCRIPTION
PARTS LIST
UNLESS OTHERWISE SPECIFIED DIMENSIONS ARE IN INCHES TOLERANCES ARE:
FRACTIONS ± DECIMALS .XX ± .XXX ± ANGLES ±
MATERIAL
FINISH
CONTRACT NO.
APPROVALS | DATE
DRAWN Wynema 4-16-80
CHECKED Cordy Hook 5-30-80
Gremlin Industries, Inc.
San Diego, California 92123
SCHEMATIC — CARNIVAL SOUND
SIZE D | CODE IDENT NO. | DRAWING NO. 800-3057 | REV B
SCALE NONE | SHEET 6 OF 6
NEXT ASSY | USED ON
APPLICATION
DO NOT SCALE DRAWING
800-3057 B

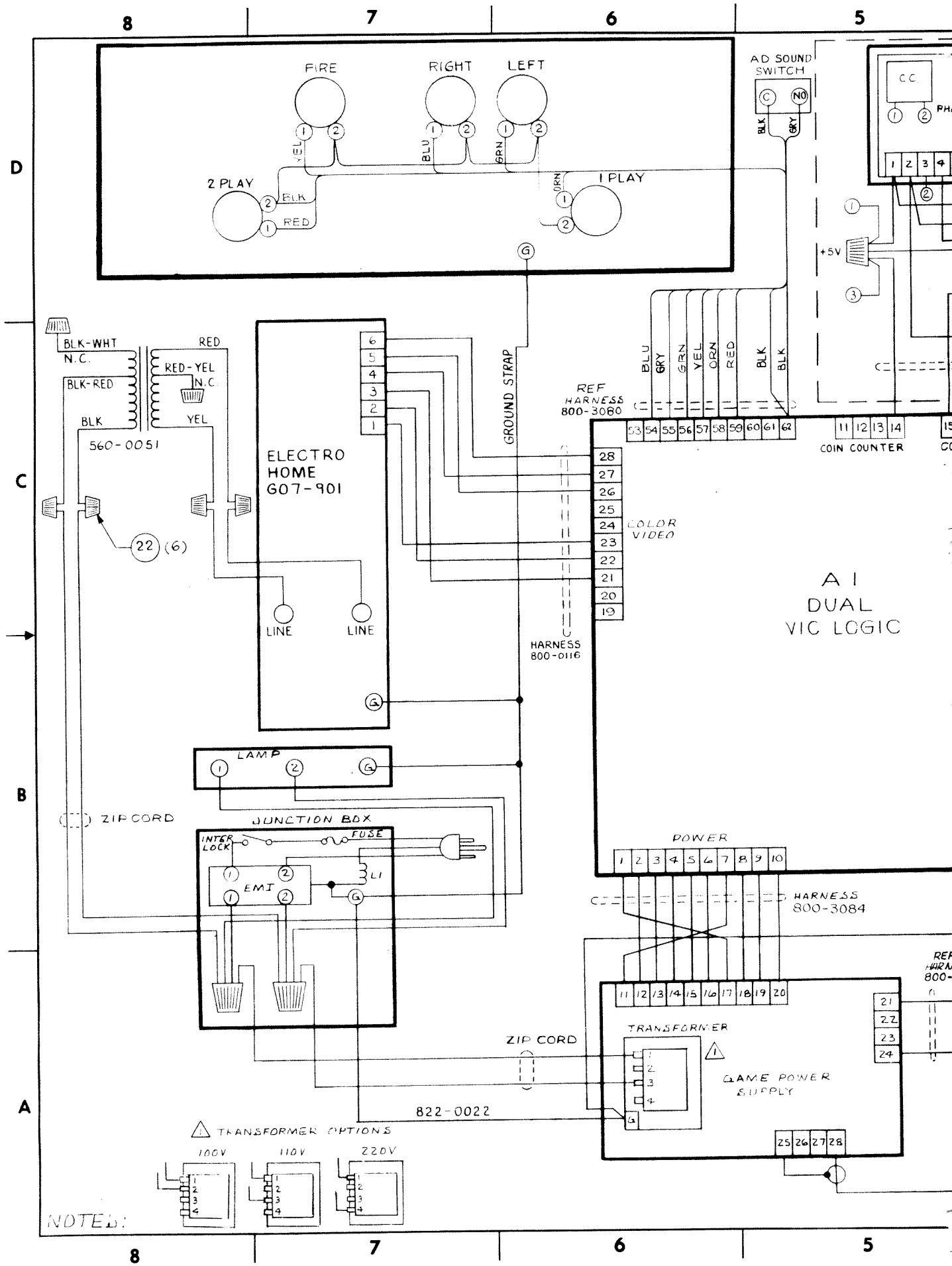
8
7
6
5
D
C
B
A
FIRE
RIGHT
LEFT
2 PLAY
1 PLAY
YEL
BLU
GRN
ORN
BLK
RED
AD SOUND SWITCH
C
NO
BLK
GRY
+5V
BLK-WHT
N.C.
RED
RED-YEL
N.C.
BLK-RED
BLK
YEL
560-0051
ELECTRO HOME G07-901
GROUND STRAP
REF HARNESS 800-3080
BLU
GRY
GRN
YEL
ORN
RED
BLK
BLK
53 54 55 56 57 58 59 60 61 62
11 12 13 14
COIN COUNTER
28 27 26 25 24 23 22 21 20 19
COLOR VIDEO
HARNESS 800-0116
LINE
LINE
22 (6)
A1
DUAL
VIC LOGIC
LAMP
ZIP CORD
JUNCTION BOX
INTER LOCK
FUSE
EMI
L1
POWER
1 2 3 4 5 6 7 8 9 10
HARNESS 800-3084
11 12 13 14 15 16 17 18 19 20
21 22 23 24
TRANSFORMER
GAME POWER SUPPLY
ZIP CORD
822-0022
25 26 27 28
TRANSFORMER OPTIONS
100V
110V
220V
NOTES:

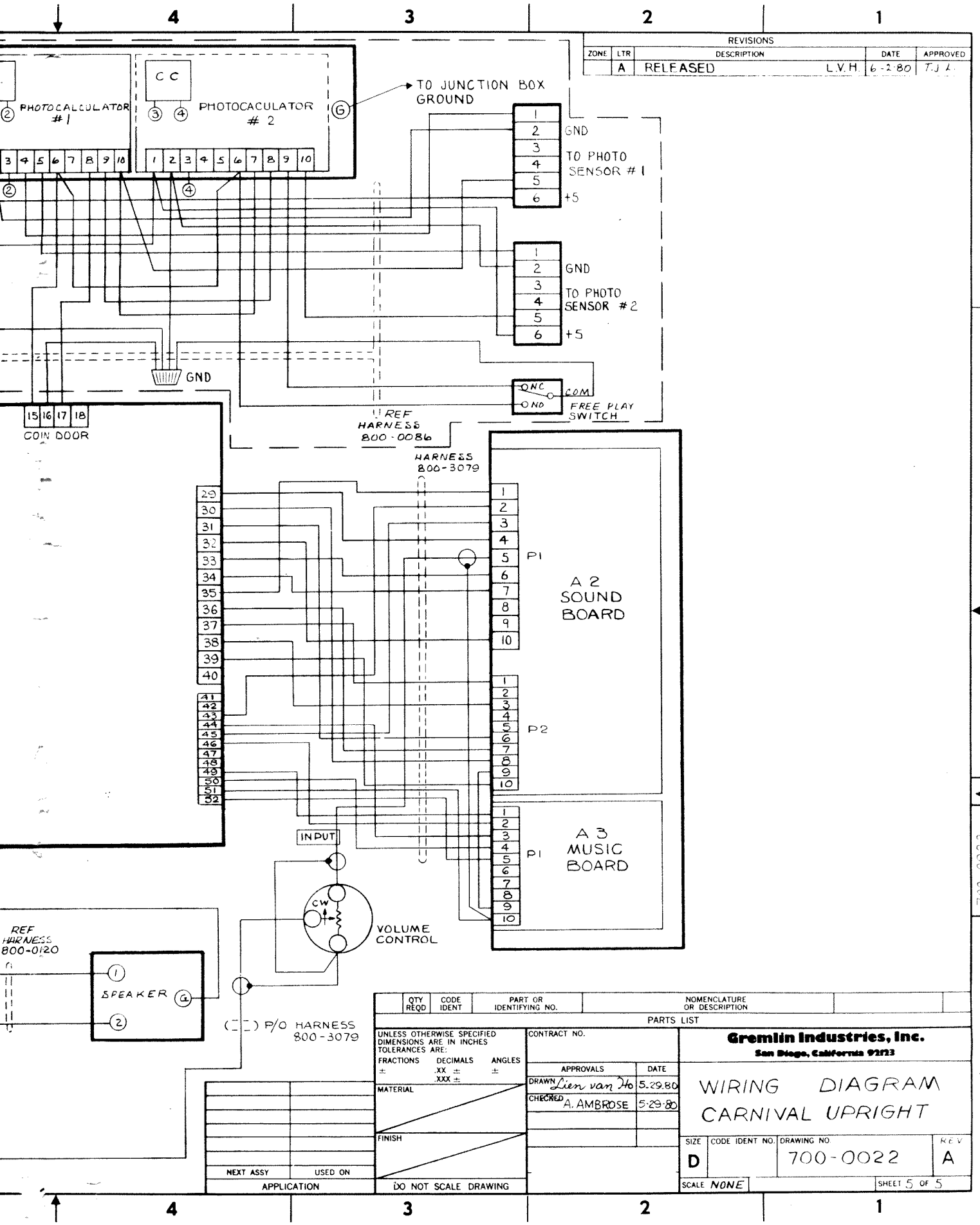
REVISIONS
ZONE | LTR | DESCRIPTION | DATE | APPROVED
A | RELEASED L.V.H. | 6-2-80 | TJ A
PHOTOCALCULATOR #1
PHOTOCACULATOR # 2
TO JUNCTION BOX GROUND
GND
TO PHOTO SENSOR # 1
+5
TO PHOTO SENSOR #2
GND
QNC
COM
QNO
FREE PLAY SWITCH
REF HARNESS 800-0086
HARNESS 800-3079
COIN DOOR
A 2 SOUND BOARD
P1
P2
A 3 MUSIC BOARD
P1
INPUT
CW
VOLUME CONTROL
REF HARNESS 800-0120
SPEAKER
P/O HARNESS 800-3079
QTY REQD | CODE IDENT | PART OR IDENTIFYING NO. | NOMENCLATURE OR DESCRIPTION
PARTS LIST
UNLESS OTHERWISE SPECIFIED DIMENSIONS ARE IN INCHES
TOLERANCES ARE:
FRACTIONS ± DECIMALS .XX ± .XXX ± ANGLES ±
MATERIAL
FINISH
DO NOT SCALE DRAWING
CONTRACT NO.
APPROVALS | DATE
DRAWN Lien van Ho | 5-29-80
CHECKED A. AMBROSE | 5-29-80
Gremlin Industries, Inc.
San Diego, California 92123
WIRING DIAGRAM
CARNIVAL UPRIGHT
SIZE D | CODE IDENT NO. | DRAWING NO. 700-0022 | REV A
SCALE NONE | SHEET 5 OF 5
NEXT ASSY | USED ON
APPLICATION
700-0022

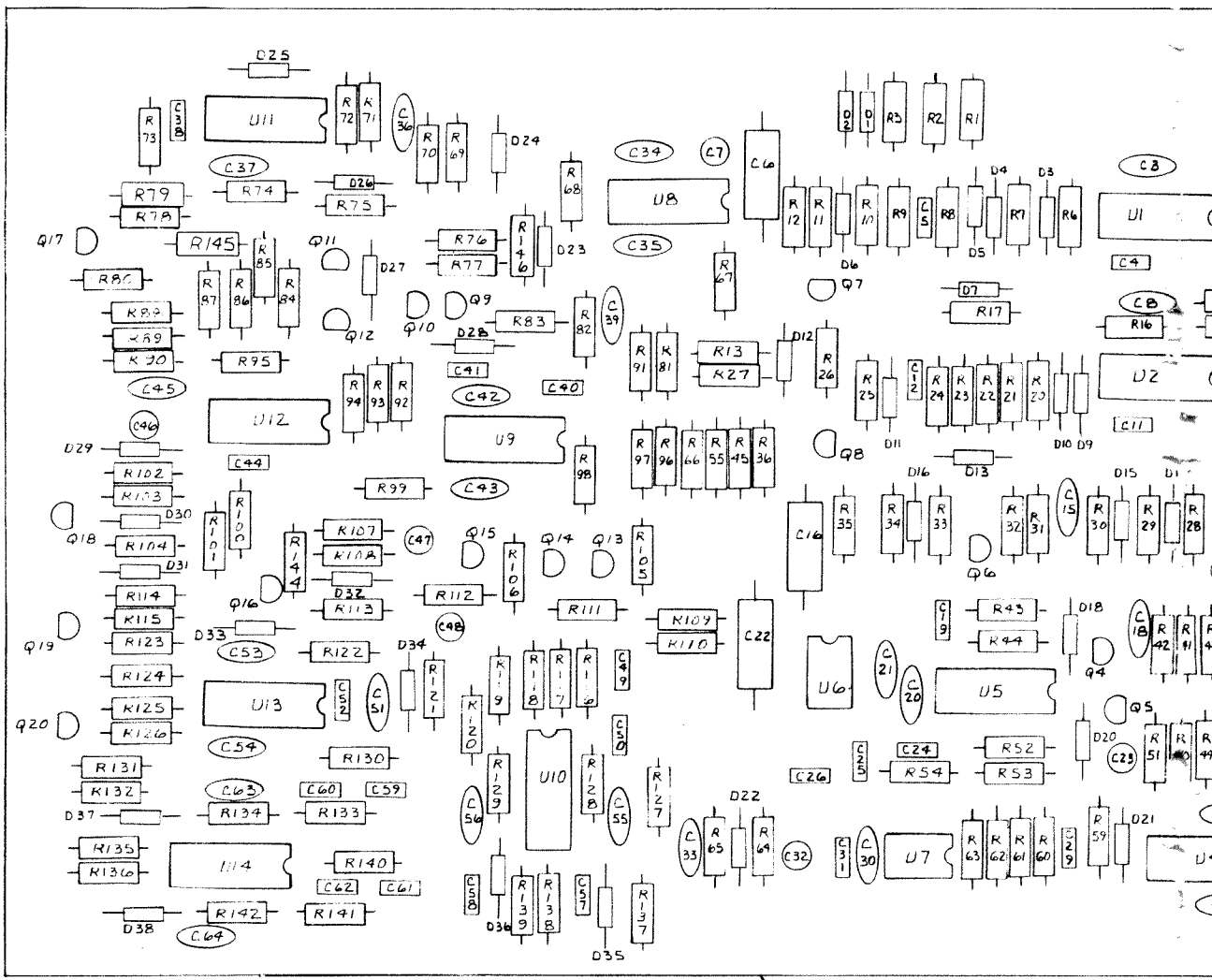
U11
U8
U1
U12
U9
U2
U13
U10
U6
U5
U14
U7
U4
Q17
Q11
Q12
Q9
Q10
Q8
Q7
Q18
Q15
Q14
Q13
Q6
Q19
Q16
Q4
Q5
Q20
17

REVISIONS				
ZONE	LTR	DESCRIPTION	DATE	APPROVED
	A	RELEASED	4-24-80	
	B	PER ECN 409		

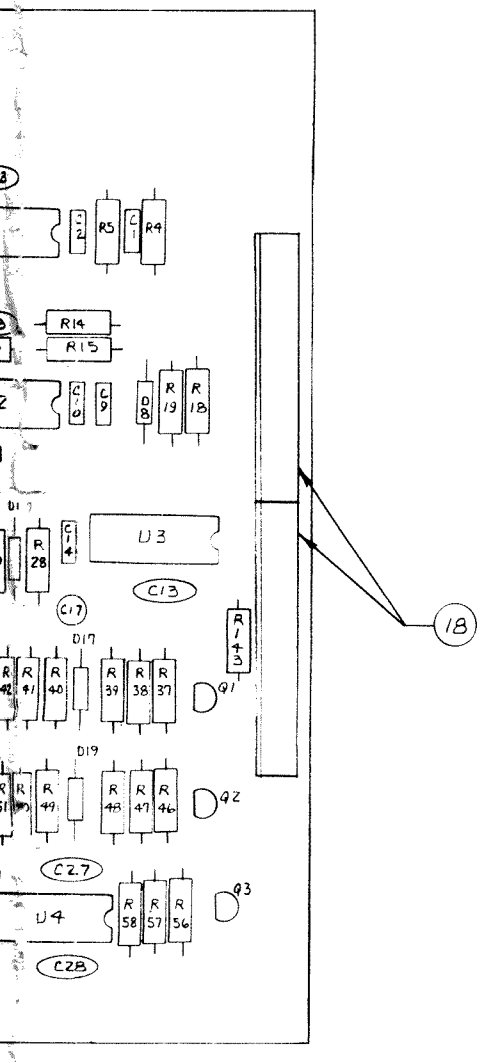

SEE DETACHED PARTS LIST

QTY REQD	CODE IDENT	PART OR IDENTIFYING NO.	NOMENCLATURE OR DESCRIPTION

PARTS LIST

UNLESS OTHERWISE SPECIFIED DIMENSIONS ARE IN INCHES
TOLERANCES ARE:
FRACTIONS ± DECIMALS .XX ± .XXX ± ANGLES ±

MATERIAL

FINISH

DO NOT SCALE DRAWING

CONTRACT NO.

APPROVALS	DATE
DRAWN Wynema	4-17-80
CHECKED	

Gremlin Industries, Inc.
San Diego, California 92123

ASSEMBLY — CARNIVAL SOUND

SIZE	CODE IDENT NO.	DRAWING NO.	REV
D		800-3057	B

SCALE 2/1 SHEET 5 OF 6

NEXT ASSY	USED ON
APPLICATION	

800-3057 B

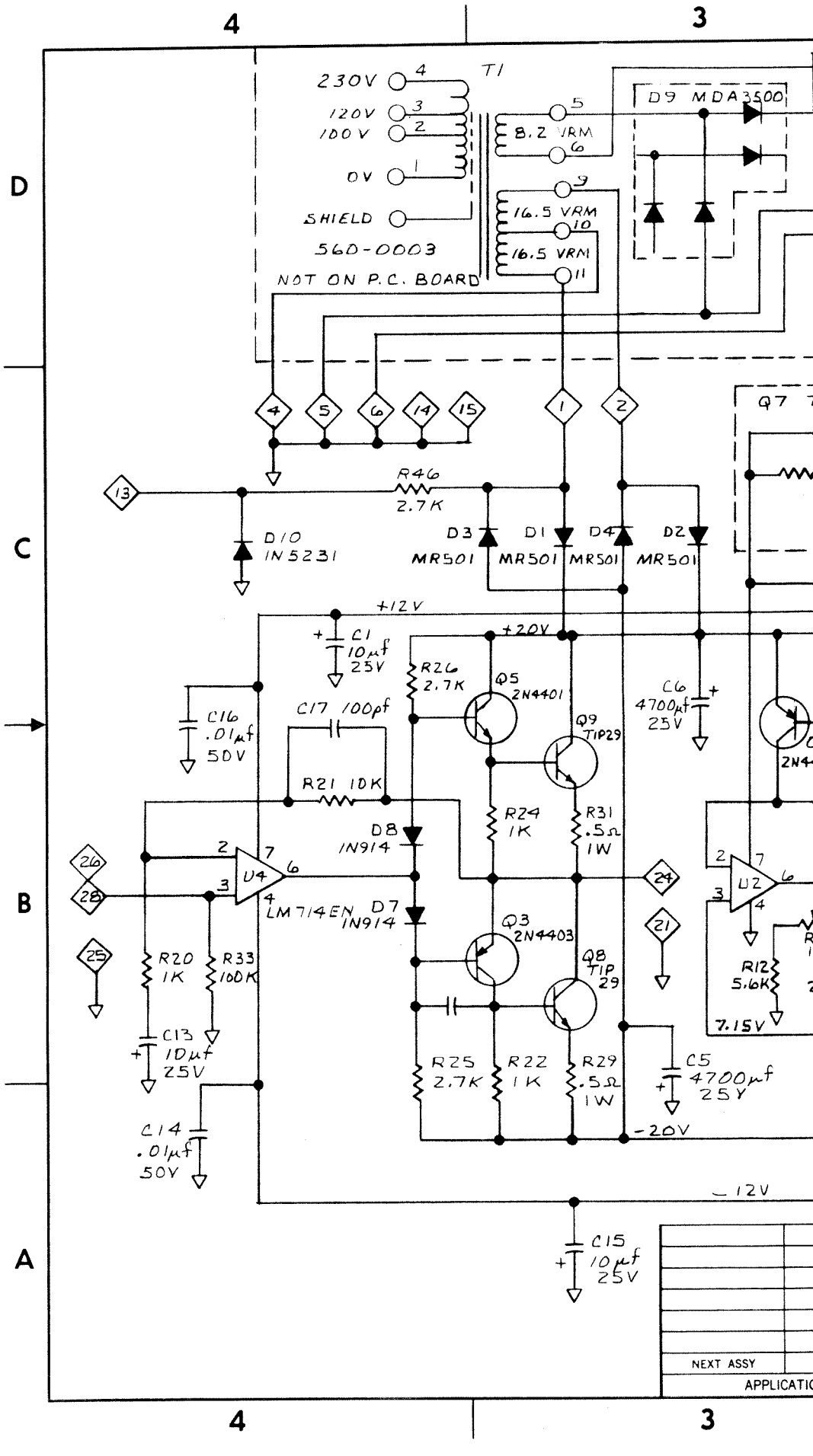
4
3
D
C
B
A
230V
120V
100V
0V
SHIELD
560-0003
NOT ON P.C. BOARD
T1
8.2 VRM
16.5 VRM
16.5 VRM
D9 MDA3500
R46
2.7K
D10
IN5231
D3
MR501
D1
MR501
D4
MR501
D2
MR501
+12V
+20V
C1
10µf
25V
C16
.01µf
50V
C17 100pf
R26
2.7K
Q5
2N4401
Q9
TIP29
C6
4700µf
25V
R21 10K
R24
1K
R31
.5Ω
1W
D8
IN914
U4
LM714EN
D7
IN914
Q3
2N4403
Q8
TIP
29
R20
1K
R33
100K
C13
10µf
25V
C14
.01µf
50V
R25
2.7K
R22
1K
R29
.5Ω
1W
C5
4700µf
25V
-20V
-12V
C15
10µf
25V
U2
R12
5.6K
7.15V
Q7
NEXT ASSY
APPLICATIO

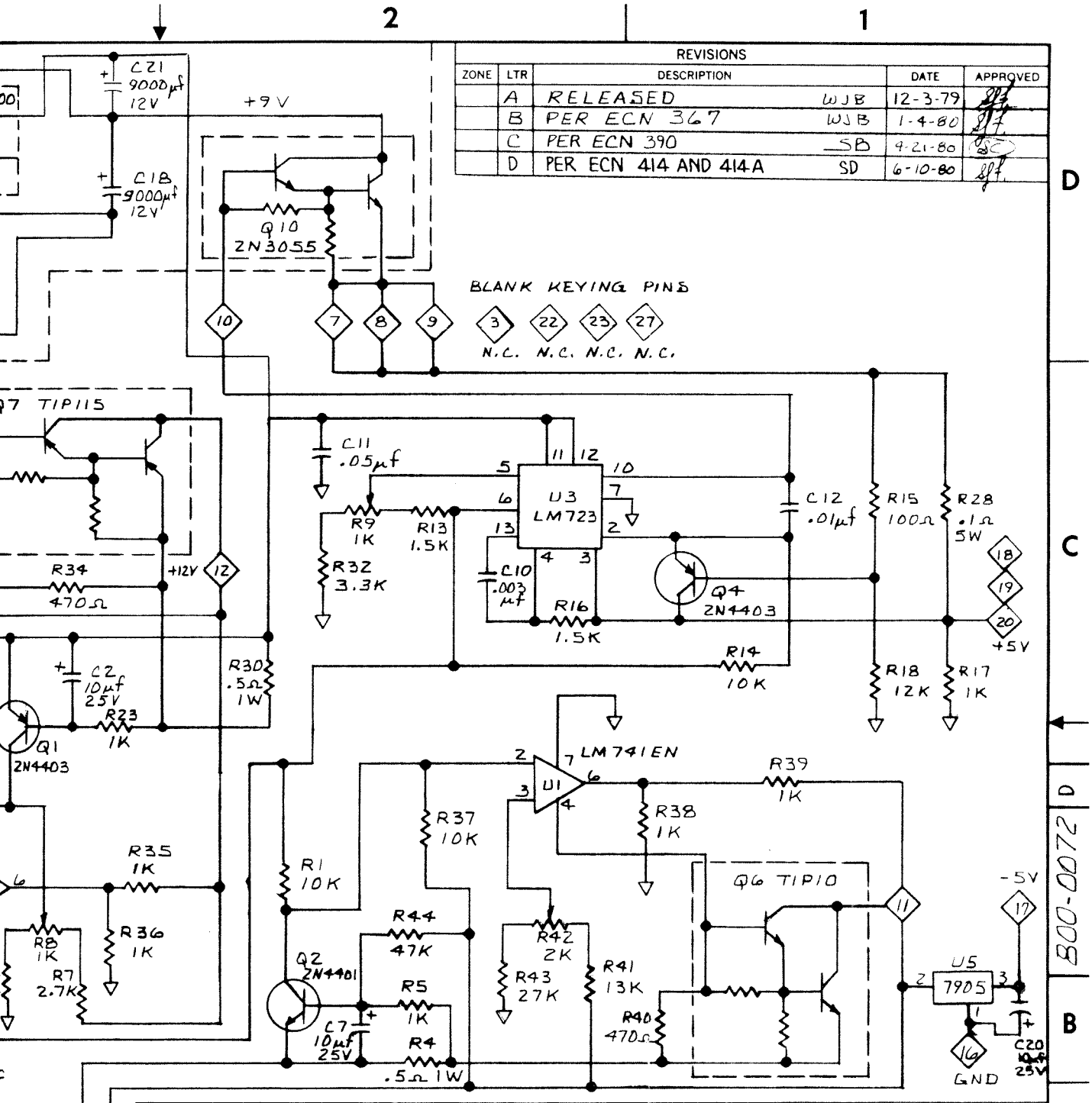

REVISIONS					
ZONE	LTR	DESCRIPTION		DATE	APPROVED
	A	RELEASED	WJB	12-3-79	[signature]
	B	PER ECN 367	WJB	1-4-80	[signature]
	C	PER ECN 390	SB	4-21-80	[signature]
	D	PER ECN 414 AND 414A	SD	6-10-80	[signature]

QTY REQD	CODE IDENT	PART OR IDENTIFYING NO.	NOMENCLATURE OR DESCRIPTION

PARTS LIST

UNLESS OTHERWISE SPECIFIED DIMENSIONS ARE IN INCHES
TOLERANCES ARE:
FRACTIONS ± DECIMALS .XX ± .XXX ± ANGLES ±

MATERIAL

FINISH

USED ON

LICATION

DO NOT SCALE DRAWING

CONTRACT NO.

APPROVALS		DATE
DRAWN	Wynema	12-3-79
CHECKED	[signature]	12-3-79

Gremlin Industries, Inc.
San Diego, California 92123

SCHEMATIC — POWER SUPPLY DUAL GAMES

SIZE	CODE IDENT NO.	DRAWING NO.	REV
C		800-0072	D

SCALE NONE SHEET 4 OF 4

800-0072 D